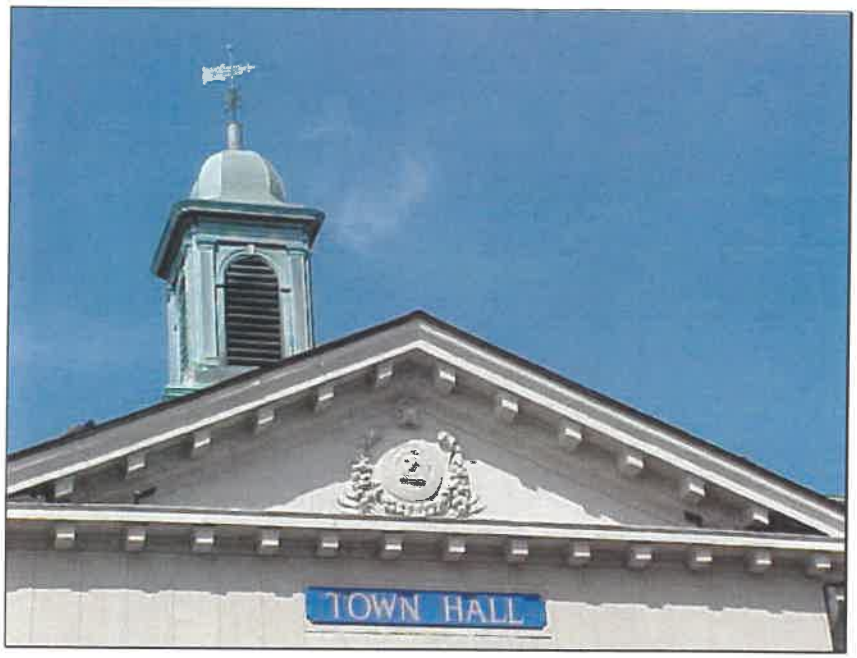

Rules and Regulations
Governing the Subdivision of Land

Braintree Planning Board

November 1, 2002

Braintree Planning Board

Braintree Town Hall
One John Fitzgerald Kennedy Memorial Drive
Braintree, Massachusetts 02184
Phone: 781.794.8234

TABLE OF CONTENTS

SECTION I
GENERAL PROVISIONS

No person, firm, or corporation shall subdivide any lot, tract, or parcel of land or construct streets or utilities* in such land until definitive plans of such subdivision have been approved by the Planning Board as hereinafter provided. The engineer and/or surveyor must stamp and sign his/her plan as required by MGL. No individual shall affix his/her name to any plan as engineer or surveyor unless duly registered or authorized to practice as such in accordance with the provisions of MGL Chapter 112.

No subdivision plan shall be recorded and no lots in a subdivision sold unless a definitive plan has been approved by the Planning Board as hereinafter provided and unless a performance bond or covenant has been provided to the Town as required by these Rules and Regulations [Section VI].

Approval of a definitive plan shall not constitute the laying out or acceptance by the Town of any way shown on such plan as a town way. Said approval shall not obligate the Town to accept any public improvement or reserved area shown on the plan until Town Meeting has accepted such improvement or reserved area. The ways shown on such plan shall not become public ways unless and until laid out and accepted under the provisions of MGL Chapter 82, Sections 21 through 24 inclusive or Acts in amendment thereof or substitution therefor.

The applicant and any successor in title shall be responsible for completing all construction as required by the applicant's covenants and agreements with the Town and to maintain all streets and utilities* in a satisfactory condition until they are accepted by the Town.

Prior to endorsement of any approved plan, the applicant shall provide to the Planning Board and at no cost to the Town a deed conveyance transferring to the Town easements for all utilities in the subdivision and all ways shown on the subdivision plan and for all other easements. Said conveyance shall become effective upon acceptance by the Town. As well, the applicant shall convey to the Town perpetual rights and easements to all utilities* under a strip of land extending 10' on each side of the centerline of all such utilities* not within the subdivision streets.

No surety shall be released nor Certificate of Performance issued by the Planning Board until such instruments and easements have been granted to the Town by the applicant.

No Building Permit shall be issued for a lot within a subdivision unless a definitive plan for such subdivision has been recorded.

Not more than one building designed or available for dwelling purposes shall be erected, placed or converted for use on any lot in a subdivision, or elsewhere in Town, without the consent of the Planning Board. Such consent will be conditional upon the provision of adequate ways for access to each site for such building and adequate utilities for such building in the same manner as otherwise required for lots within a subdivision and in compliance with the Braintree Zoning Bylaw [Zoning Bylaw].

No Planning Board member shall be paid by an applicant for any reason.

Costs for outside legal and engineering services necessary during subdivision review shall be borne by the applicant. The Board shall refund to the applicant any funds not expended for said outside review.

* Utilities shall mean anything normally considered a utility such as sanitary sewer, storm water drain, fire alarm, telephone, electric and cable conduit, water and gas mains and all appurtenances thereto.

SECTION II
DEFINITIONS

In addition to the following words having the following meanings, the Planning Board relies on the definitions contained in MGL Chapter 41 Section 81-L. When a word is defined in neither MGL nor these Rules and Regulations, the definition found in the most recent edition of Webster's New International Dictionary shall apply.

Adequate Capacity
Level of Service [LOS] D or better on every major approach for Arterial and Collector Streets; LOS C or better for Residential and Subcollector Streets

Adjoining Lot
A lot or parcel of land which shares all or part of a common lot line with another lot or parcel of land

Applicant
An owner or his/her agent or representative, or his/her assigns

Approval, Final
Approval by the Board of a definitive plan submitted in accordance with Section V of these Rules and Regulations and MGL Chapter 41, Section 81-T

Average Daily Traffic [ADT]
The number of vehicles passing a point on a street during a 24-hour period on a typical day

Board
The Planning Board of the Town of Braintree

Capacity of an Intersection
The maximum number of vehicles which can reasonably be expected to be processed through an intersection or street segment during a one hour peak time period

Construction Activity
Developing, redeveloping, enhancing and maintaining land, including but not limited to land disturbance, building construction, paving and surfacing, storage and disposal of construction related materials

Curve - Vertical, Crest
When the profile goes from a positive [uphill] slope to a negative [downhill] slope, from positive slope to a flatter positive slope, or from a negative slope to a steeper negative slope

Curve-Vertical, Sag
When the profile goes from a negative slope to a positive slope, from a negative to a flatter negative slope, or from a positive slope to a steeper positive slope

Design Year
The fifth year after a development is scheduled to be completed

Development
Any construction or grading activities

Dewatering
Removal and disposal of surface water or ground water to prepare a site for construction

Directly Drains
Conveyance and discharge of runoff, either on the surface or by an open channel or pipe, into an adjacent water body

Disturbed Area
An area where the ground cover is destroyed or removed

Erosion
Detachment and movement of soil or rock fragments by water, wind, ice or gravity

Erosion Prevention
Measures to prevent and/or minimize erosion, sedimentation and other impacts associated with construction activities

Exceptional Peak Period
An exceptional hourly, daily or seasonal period of trip generation [i.e., the December holiday]

Frontage
A contiguous lot boundary line which abuts a public way and across which line there is legal and physical access

Grading
Any activity that results in a change in the existing soil cover [both vegetative and non-vegetative] or the existing topography

Grading activities include: the removal of any rock, natural soil, fill or any combination thereof; the placement or stockpiling of fill; the clearing of trees and vegetation for the purpose of constructing roads, site improvements or structure, installing utility lines or making use of the land in other than its natural state.

Highly Erodible Soils
Soil map units classified as such by the Natural Resources Conservation Service

Impacted Street
A residential or subcollector street or intersection receiving 25 or more peak hour trips from a development; a collector or arterial street or intersection receiving 50 or more peak hour trips from a development

Inspector
An individual authorized by the Planning Board or the Town Engineer to inspect work performed as required by these Rules and Regulations

Land Disturbance
Activities that can change the physical conditions of landform, vegetation or hydrology including but not limited to clearing, grading, grubbing, excavation, filling and storing of materials

Level of Service [LOS]
A measure of the operating conditions of an intersection or street segment ranked on a scale from LOS A

[optimum] to LOS F [failing] as defined in the latest edition of the Transportation Research Board's Highway Capacity Manual

Owner
The owner of record as shown by the records in the Registry of Deeds

Pass-by Trips
The number of trips captured by a land use from existing traffic on an adjacent street

Peak Hour
The four consecutive 15 minute periods of heaviest volume of traffic on a street or from a development

Peak Period:	**Morning**	7 A.M.	to	9 A.M.
	Evening	3 P.M.	to	6 P.M.
	Saturday	Noon	to	4 P.M.

Plan, Definitive
A plan of a proposed subdivision or resubdivision submitted for approval in accordance with MGL Chapter 41, Section 81-T and Section V of these Rules and Regulations

Plan, Preliminary
A plan of a proposed subdivision or resubdivision submitted for review by the Planning Board prior to the preparation of the definitive plan in accordance with MGL Chapter 41, Section 81-L and Section 81-S and Section IV of these Rules and Regulations

Registered Professional Engineer [RPE]
An individual registered as a Civil Engineer with the Board of Registration of Professional Engineers and of Land Surveyors as described in MGL Chapter 112, Section 81-D

Registered Professional Land Surveyor [RPLS]
An individual registered as a Land Surveyor with the Board of Registration of Professional Engineers and of Land Surveyors as described in MGL Chapter 112, Section 81-D

Registry of Deeds
The Registry of Deeds of the County of Norfolk including, when appropriate, the Norfolk Registry District of Land Court

Roadway or Traveled Way
That portion of a way designed and intended for vehicular use

Rules and Regulations
Rules and Regulations Governing the Subdivision of Land adopted by the Planning Board

Signal Phase
That part of a traffic signal's time cycle allocated to a traffic movement or a combination of movements, including exclusive pedestrian movements, receiving the right-of-way simultaneously

Soil
All earth material of any origin that overlies bedrock and may include the decomposed zone of bedrock that can be excavated readily by mechanical means

Street, Arterial	An interregional street with an ADT of more than 5,000 [vehicles] conveying traffic between centers
Street, Collector	A street carrying a maximum ADT of 5,000 [vehicles] between arterial streets and residential and subcollector streets and having limited direct access to lots
Street, Residential	A street with a maximum ADT of 1,000 [vehicles] providing frontage for access to lots and carrying traffic originating on or destined for the street itself
Street, Subcollector	A street with a maximum ADT of 2,000 [vehicles] providing access to lots and carrying residential traffic to collector and arterial streets

Study Area
An area encompassing all impacted streets

Town Engineer
The Town Engineer or a duly authorized representative

Trip
A single or one-directional vehicle movement

Trip Assignment
Assignment of development-generated and through trips from a development's driveways to municipal streets

Trip Rate
The number of trips per unit of independent variable [i.e., trips per dwelling unit, employee or square footage]

Untreated Runoff
Contaminated runoff that has not been filtered, screened, settled or otherwise treated for removal of pollutants prior to discharge into a storm water system or adjacent water body

Water Body
Permanent or intermittent bodies of water including creeks, streams, ponds, rivers, lakes, drainage channels and wetlands

Wetland
Any land which meets local, state or federal definition of wetland and is subject to the jurisdiction of the Conservation Commission

SECTION III
APPROVAL UNDER SUBDIVISION CONTROL NOT REQUIRED

Any person who wishes to record a plan of land in the Registry of Deeds and who believes that the plan does not require approval under the Subdivision Control Law shall file an Approval Not Required [ANR] Plan pursuant to MGL Chapter 41, Section 81-P. When determining if a subdivision is shown on said plan, the Board shall rely on the definition of subdivision found in MGL Chapter 41, Section 81-L.

A. Submission Requirements

When requesting ANR approval an applicant shall submit the following:

1) Two Form A applications with original signatures [One will be submitted to the Town Clerk.]

2) The filing fee of $100 per application plus $400 for each new buildable lot created by the ANR plan

3) A mylar and 3 paper copies of the ANR plan [If the land being divided is both registered and unregistered, two mylars may be necessary and both submitted for endorsement with the application. Plans to be filed at Land Court shall comply with the "Manual of Instructions for Survey of Lands and Preparation of Plans to be Filed in the Land Court."]

4) Written consent of the current record property owner(s) to the filing [If the applicant is not the owner, the owner shall either sign the application or submit a separate letter addressed to the Planning Board authorizing the submission.]

B. Plan Requirements

The plans shall contain the following information:

1) Plan title, original date of plan, revision dates if any, boundaries, north arrow, scale and locus

2) Name and address of current record owner, applicant and surveyor and seal and signature of an RPLS

3) Date of survey and/or other sources of information. Certification that the plan meets the requirements of the Registry of Deeds

4) The statement "Approval Under Subdivision Control Law Not Required" and sufficient space for the date and endorsement of the Planning Board

5) Names of all abutting property owners as they appear in the most recent tax list

6) Location of all permanent bounds, identified as existing or proposed

7) The entire parcel of land being divided with existing and proposed lot lines and lot areas [Proposed lots shall be numbered for identification.]; all existing rights-of-way or easement lines existing, being created or modified; all adjoining lots held by the property owner or applicant shown in their

entirety; location of all existing structures with street numbers; all existing drainage pipes and drainage ditches; all existing water and sewer facilities

8) The name, width, status [public/private] of the way(s) providing frontage and access to the lots shown on the plan and the extent of the paved improvements within the way(s)

9) Location of all water courses, wetland and floodplain areas on lots shown on the plan [For floodplain areas, base flood elevation in National Geodetic Vertical Datum shall be provided.]

10) Current zoning classification including any overlay zoning districts such as Watershed [If the land being divided lies within more than one zoning district, all zoning lines shall be shown in relation to the proposed and existing lots.]

11) Notation of any Special Permit and/or Variance issued for the land or any buildings thereon

12) Evidence that each lot created or altered by the plan meets one of the three following criteria:

    a) has the minimum frontage required by the Zoning Bylaw
    b) has been clearly marked on the plan as being joined to and made part of an existing adjoining lot in a manner so as not to affect frontage
    c) contains two or more buildings which existed prior to June 21, 1949 and a building remains standing on each of the lots shown on the accompanying plan.

C. Review and Decision Process

The application is scheduled within 21 calendar days on an agenda under regular business with the Board for review and vote of endorsement. This is not a public hearing.

1) Endorsement of a plan not requiring approval

The Planning Board will endorse a plan that meets all guidelines of MGL Chapter 41, Sections 81L and 81P and these Rules and Regulations. The Board shall notify the Town Clerk of its action and send a copy of the decision to the applicant and Assessors' office.

2) Endorsement of a plan not in compliance with the Zoning Bylaw

When the Board endorses a plan that shows lot(s) that do not comply with the Zoning Bylaw the following notation shall be placed on the plan above the Board's endorsement block:

"NO DETERMINATION AS TO COMPLIANCE WITH ZONING REQUIREMENTS HAS BEEN MADE OR INTENDED."

3) Determination that the plan requires subdivision control approval

An endorsement of an ANR plan shall be withheld if the plan shows a subdivision of land or the applicant has not provided sufficient evidence to substantiate a claim that the plan does not show a subdivision as provided in MGL Chapter 41, Section 81-L. The Board shall notify the Town Clerk as to its action and send a copy of the decision to the applicant.

4) Failure of the Planning Board to act or to notify the Town Clerk

If the Board fails to act upon an ANR plan or fails to notify the Town Clerk of the Board's actions within the time period required by MGL Chapter 41 Section 81-P, it shall be deemed that approval under the Subdivision Control Law is not required and the Board shall endorse the plan. Should the Board fail to do so and upon request of the applicant, the Town Clerk shall issue a certificate stating that the ANR plan is approved because of the Board's failure to act on the plan and/or to file with the Town Clerk notice of its action.

D. Extension

If the Board cannot act on an application within 21 days as required by MGL Chapter 41, Section 81-P, the applicant may be asked to grant a written extension to a date certain beyond the required timeframe.

E. Recording of Approved Plan at Registry

Once endorsed, the mylar is returned to the applicant for recording at the Registry of Deeds with proof of recording submitted to the Department of Planning and Conservation. A Building Permit cannot be issued until such proof is submitted.

SECTION IV
PRELIMINARY PLAN

For *residential subdivisions* a preliminary plan **may** be submitted to the Planning Board and to the Board of Health prior to the submission of a definitive plan. For *commercial subdivisions* a preliminary plan **shall** be submitted to the Planning Board and to the Board of Health prior to the submission of a definitive plan. The submission of a preliminary plan will enable the applicant, the Planning Board, the Board of Health and other municipal agencies to discuss and clarify the problems relating to a subdivision before a definitive plan is prepared.

A. Filing Requirements

The applicant shall submit to the Planning Board

1) Two applications with original signatures [One will be submitted to the Town Clerk.]

2) Receipt from the Board of Health that the applicant has filed a preliminary plan with that board

3) Application fee of $300 payable to the Town of Braintree

4) Copies of any material specified in the application packet

B. Plan Requirements [submitted in accordance with MGL Chapter 41, Section 81-L]

1) The preliminary plan shall show all wetlands, floodplains, ponds, and adjacent natural water ways and the profiles of all proposed streets with existing and proposed grades along the center lines based on NGVD.

2) In accordance with MGL Chapter 41 Section 81-L, the preliminary plan shall be drawn at a scale of 1" = 40' and shall show:

   a) Subdivision name, boundaries, north point, date, scale, legend and title "Preliminary Plan"
   b) Names of the record owner and the applicant and the name and seals of the engineer and surveyor
   c) Names of all abutters, as determined from the most recent local tax list
   d) Existing and proposed lines of streets, ways, easements and any public areas within the subdivision
   e) Proposed system of drainage, including adjacent existing natural water ways
   f) Existing and proposed utilities intended to service the subdivision
   g) Approximate boundary lines of proposed lots, with approximate areas and dimensions
   h) Names, approximate locations and widths of adjacent streets
   i) Topography of the land

C. Other Requirements

Where sewer is not available, percolation tests [or such other equivalent testing as may be approved by the Board of Health] may be required. Tests are to be conducted as outlined in 310 CMR 15.000 The State Environmental Code Title V: Minimum Requirements for the Subsurface Disposal of Sanitary Sewage.

Two copies of a report showing the location and results of the tests are to be submitted to the Planning Board before approval of the preliminary plan.

Even in the presence of sewer, percolation tests may be required to determine the drainage capacity of the land.

D. Approval

Within 45 days of submission of the preliminary plan, the Planning Board will notify the applicant and the Town Clerk of its decision. In the case of disapproval, reasons shall be given. Approval of a preliminary plan shall not be considered as approval of the subdivision. An approved preliminary plan shall not be recorded in the Registry of Deeds.

SECTION V
DEFINITIVE PLAN

A. General

The applicant shall give written notice to the Town Clerk [hand delivery or registered mail] that he/she has submitted the definitive plan to the Planning Board. Such notice shall include a description of the land to which the plan relates sufficient for identification, the name and address of the owner and of the subdivision and the date the definitive plan was submitted to the Board.

A copy of the definitive plan shall be filed with the Board of Health who, within 45 days of receipt, shall send a written report to the Planning Board indicating approval or disapproval of said plan. Failure to so report shall be deemed approval by the Board of Health.

A definitive plan shall conform substantially to the preliminary plan if one has been approved. The Rules and Regulations and zoning in effect at the time of the submission of the preliminary plan shall govern the definitive plan if it is submitted within seven months of preliminary plan approval.

All lots in a subdivision shall be laid out with the minimum areas required by the Zoning Bylaw. Natural water courses and ponds may not be altered, filled, drained, piped or relocated without the approval of the Planning Board. Floodplain, marshes or seasonal wet areas may be included as part of a lot, but may not be altered, filled, drained or relocated and may not be used for building sites, sewerage disposal areas or ways without prior approval of the Board. [Approval of the definitive plan does not relieve the applicant of responsibility for securing authorization from the Conservation Commission for any work subject to the Commission's jurisdiction.]

The applicant shall maintain all required public improvements within the subdivision and provide for snow removal on streets and sidewalks until Town Meeting has accepted the streets.

B. Waivers

As allowed in MGL Chapter 41, Section 81-R, the Planning Board at its discretion may waive strict compliance with these Rules and Regulations when such action is in the public interest and not inconsistent with the intent and purpose of the Subdivision Control Law. Any applicant seeking such waivers shall include a written request with the application, identifying the specific sections of the Rules and Regulations from which waivers are requested and citing justification for the waivers. Waivers may be granted only by formal vote of the Board who shall make findings as to why the waiver is appropriate. The grant of **any** waiver shall require the affirmative vote of a majority of the Board.

C. Public Hearing

The Planning Board shall hold a public hearing before approval, modification or disapproval of a definitive plan is given. The Board gives notice of said hearing in accordance with MGL Chapter 41 Section 81-T.

D. Timeframe for Decision

In the case when a preliminary plan has been received by the Planning Board, the Board has 90 days after submission of a definitive plan to render a decision on said plan. The applicant and the Board may extend such time by written mutual agreement. The Board must file forthwith its decision or the notice of mutual

agreement to extend with the Town Clerk within said 90 days or the decision shall be deemed to be approval of the definitive plan.

In the case when no preliminary plan has been received, the Board has 135 days after submission of a definitive plan to render a decision on said plan. The applicant and the Board may extend such time by written mutual agreement. The Board must file forthwith its decision or the notice of mutual agreement to extend with the Town Clerk within said 135 days or the decision shall be deemed to be approval of the definitive plan.

E. Decision

The decision of the Planning Board shall be by vote, copy of which shall be filed with and certified by the Town Clerk and sent to the applicant.

In the case of approval and after expiration of the statutory appeal period, the Board shall endorse the original drawings of the definitive plan after receipt of surety.

In the case of modification or disapproval, the Board shall state in its vote the reasons for its actions.

Approval of the definitive plan does not constitute the laying out or acceptance by the Town of streets within a subdivision.

F. Plans for Endorsement

After approval of the definitive plan, the applicant shall submit a complete set of plans for endorsement by the Planning Board. Said plans shall be drawn in black waterproof ink on mylar film or other medium acceptable to the Board.

G. Notification of Recording of Plan

Prior to the start of any activity authorized by definitive plan approval, the applicant shall provide to the Planning Board proof of recording the definitive plan and covenant, should one have been executed, at the Registry of Deeds.

After notification the Board shall file one copy of the definitive plan with the Inspector of Buildings. When a covenant has been executed, the Inspector of Buildings shall not issue any Building Permit for any lot within the subdivision without receipt from the Board of a copy of the Certificate of Performance or Certificate of Release of Lots.

H. Modification, Amendment and Recision

The Planning Board shall have the power to modify, amend or rescind its approval of a definitive plan or to require a change in a plan in accordance with the provisions of MGL Chapter 41, Section 81W. All provisions relating to the submission and approval of a definitive plan shall apply to modifications, amendments or recisions of approvals.

No modification, amendment or recision shall affect any lot, or any rights appurtenant thereto, which have been sold or mortgaged subsequent to the approval of a definitive plan without the consent of the owners or mortgage holders of such lots, except when either the entire parcel of land shown on the definitive plan or all the lots not previously released by the Board have been sold to a single grantee.

The applicant shall complete all public improvements in the subdivision within two years of definitive plan approval or within such time as agreed upon by the applicant and the Board. Failure to complete said improvements within the agreed upon timeframe shall result in automatic recision of the definitive plan.

I. As-Built Approval

When a subdivision has been completed, the applicant shall submit an As-Built plan reflecting the actual conditions of the improved site both in paper copy and in electronic form [compatible with current requirements of the Department of Public Works].

The Board will require the following:

1) Plan of the road or way at a scale of 1" = 40' showing all utilities [including location, size, rim and invert elevations of all sewer and drainage systems], water lines [including gates, hydrants, blow-offs and other appurtenances], gas lines [including gates and drips and other appurtenances], limits of rights-of-way, curbs, sidewalks, roadway spot grades on the centerline and gutter, accuracy of bound installation, and property lines [See Water and Sewer Department for additional requirements.]

2) Profile Plan at a scale of 1" = 4' vertical and 1" = 40' horizontal showing centerline profile at 50' intervals along the road or way, views of all water, sewer and drain manholes with elevations of rims and inverts, drainage pipes and utility wiring ducts

3) An engineering report detailing any derogations from the approved plans, with recommendations as to how to bring the work into conformity with the approved plans

4) Street Layout Plan suitable for submission to the Town Meeting for street acceptance and for filing in the Registry of Deeds

5) Proof that the applicant has complied with all requirements of the Fire Department, Board of Health, Braintree Electric Light Department and the Department of Public Works

J. Submission Requirements

1) <u>Application</u>

The following items must be included for an application to be accepted:

a) 2 application forms with original signatures [One will be submitted to the Town Clerk.]
b) Paper copies of the plans and copies of application [Consult with Department of Planning and Conservation for number of copies.]
c) List of abutters certified by the Assessors' Office within 60 days of definitive plan submittal date
d) Set of stamped envelopes addressed to abutters and submitted in the order they appear on the certified abutters' list
e) Receipt indicating that the applicant has filed with the Board of Health
f) Fee payable to the Town of Braintree [$400.00, plus $400.00 per subdivision lot]

2) Drainage Calculations

The applicant shall submit drainage calculations prepared by the applicant's engineer, including design criteria used, drainage area and other information sufficient for the Board to check the size of any proposed drain.

3) Projection of school enrollment

4) Plans

All information required on the preliminary plan shall be shown on the definitive plan. Plans shall be at a scale of 1" = 40'. Overall size of plans shall be 24" x 36" with a 1.5" margin for binding on the 24" side. A cover sheet showing the entire development shall accompany multiple sheets and shall show subdivision location at a scale of 1" = 1,000'.

The definitive plan shall contain the following information:

a) *Administrative*

(1) Subdivision name including the way or ways on which it is situated, boundaries, north point, date, scale, benchmark and datum, all elevations to refer to the following controls: Horizontal NAD 83 and Vertical NGVD 29
(2) Name and address of record owner, applicant, engineer and surveyor with respective seals
(3) Names of all abutters as they appear in the most recent tax list
(4) Zoning classification(s) of all areas shown on the plan
(5) Area and lot number of each lot as well as area of land owned by applicant adjoining, but not included in the subdivision
(6) Minimum building setback lines and proposed building locations for all lots
(7) Signature block for the Planning Board

b) *Streets*

(1) Locations, names and widths of streets, bounding, approaching or near the subdivision
(2) All centerlines, street lines and curb lines [with elevations every 25'] for 200' on each side of a street intersecting with a subdivision road
(3) Existing and proposed lines of streets, ways, lots, easements, waterways and public or common areas within the subdivision
(4) Lengths, radii and central angles of all curves in lot and street lines
(5) Stationing of street centerlines, with stationing for street P.C.s, P.T.s and intersections

c) *Bearings and Monuments*

(1) Data sufficient to determine, and to reproduce on the ground, the location, bearing and length of every street and way line, lot line and boundary line [All bearings shall refer to true meridian with reference to magnetic meridian and year.]
(2) Location of all permanent monuments identified as existing or proposed, the distance and bearing to at least two town, county or state monuments on an accepted way
(3) Monuments at all points of curvature and changes in direction of street side lines or as deemed necessary by the Town Engineer [Wherever a boundary line of the

subdivision is within 1,000' of a Massachusetts Coordinate Survey Monument, the survey of the subdivision shall be tied to said monument.

d) *Miscellaneous*

(1) On a separate sheet, existing and proposed topography, proposed street and lot lines and catch basins at 1' contour intervals for slopes less than 1' vertical to 10' horizontal and at 2' contour intervals for steeper slopes
(2) Subsurface conditions to include subsurface soil, rock and ground water conditions, depth to ground water [If individual sewage disposal systems are proposed, location and results of soil percolation tests.]
(3) Water courses, ponds, marshes, base flood elevation, rock outcrops, trees over 10" caliper [unless otherwise specified by the Board] and other significant natural features

e) *Typical Cross Section(s)*

Unless waived in writing by the Board, the location of the following improvements shall be shown: street paving, sidewalks, street signs, street lighting standards, all utilities above and below ground, curbs, gutters, storm drainage, hydrants, fire alarm boxes and trees to be planted within the right-of-way.

f) *Profile Plan*

A separate Profile Plan drawn at a scale of 1" = 40' horizontal and 1" = 4' vertical shall show the following:

(1) Vertical location of all proposed water, sewer and drainage lines, other utilities and required new water ways
(2) All pipe sizes and inverts, and invert and rim elevations at each manhole or catch basin
(3) Existing and proposed roadway and easement centerline grades at 50' intervals, except at a vertical curve where they shall be shown at 25' intervals
(4) P.V.C., P.V.I. and P.V.T. stations and elevations along with the vertical curve horizontal length

g) *Storm Drainage and Utility Plan*

A separate Storm Drainage and Utility Plan shall show the following:

(1) Size and location of existing and proposed storm drainage, detention/retention areas [See Section X Design Standards - Storm Drainage]
(2) Invert and rim elevations of all catch basins and manholes together with surface elevations of all water ways within the subdivision at 100' intervals and approximate depth of water at these points
(3) Surface elevation and approximate depth of water at each point where a drainage pipe ends or begins at a water way
(4) Invert and rim elevations of all sewer manholes, size, type and slope of all sewer mains and service connections and an estimate of average daily flow and peak flow conditions [See Section IX Design Standards - Water and Sewer]
(5) All water mains as proposed or existing, size and type of main, and an estimate of average daily flow and peak flow conditions with all cross-connections clearly detailed

along with the location of all proposed gate valves, hydrants, vacuum reliefs, blow-offs and other required appurtenances [See Section IX Design Standards - Water and Sewer]

(6) All proposed subsurface electric, telephone, fire and communication conduits, manholes, handholes, transformer locations, and duct crossings shall include conduit sizes and numbers and other pertinent details. [The applicant shall consult with the appropriate utility providers for their design standards.]

(7) Proposed gas mains with appropriate detail

If, in the opinion of the Planning Board, the plans contain too much detail, the Board may instruct the applicant to provide separate plans for drainage and for utilities.

h) *Erosion and Storm Water Runoff Control Plan*

A separate Erosion and Storm Water Runoff Control Plan shall be submitted in accordance with Section XI Erosion Control.

i) *Definitive Lot Layout and Perimeter Plan*

A separate Lot Layout and Perimeter Plan shall be dated within six months of the date of filing and include the following certification [in accordance with Land Court 1989 Manual of Instructions Section Q]:

"I certify that this actual survey was made on the ground in accordance with the Land Court Instructions of 1989 on _____ or between _____ and _____."

_____ _____

Signature of Professional Land Surveyor Date

SECTION VI
PERFORMANCE GUARANTEES

Prior to endorsement of a definitive plan, the Planning Board shall require, in accordance with MGL Chapter 41, Section 81-U, that the construction of ways and the installation of municipal services be secured by covenant, cash, performance bond or lender's agreement. At all times the Board shall retain sufficient surety and/or lots to ensure completion of the subdivision.

A. Acceptable Forms

Covenant: When the Planning Board accepts a covenant, the applicant shall record the accepted covenant with the endorsed definitive plan at the Registry of Deeds. The covenant shall be inscribed on the definitive plan to which it refers or shall be referred to on such a definitive plan and recorded as a separate document.

Cash: The applicant shall submit a check made payable to the Town of Braintree, include Federal Tax Identification Number or a Social Security Number and complete the Affidavit for the Submission of Cash Surety. The Department of Planning and Conservation will forward said check to Town Treasurer, who will establish an interest bearing account in the name of the applicant and the Town of Braintree.

Bond: The Board will accept only an original performance bond from a firm listed on the Massachusetts Division of Insurance's Fidelity and Surety Companies list, available for viewing at the Department of Planning and Conservation. Any bond from an out-of-state company shall designate a resident agent for service of process and shall include a clause agreeing that suit on the bond may be brought in the proper state court of Massachusetts. The bond will be forwarded to the Town's Counsel for approval. A minimum of 60 days prior to the expiration of the bond, the applicant shall submit either a replacement bond or written verification from the surety company that the renewal premiums have been paid. The Board shall act on any request for acceptance, renewal or replacement at a regularly scheduled meeting.

Performance Secured by Lender's Agreement: After the recording of a first mortgage covering the premises shown on the plan, the applicant and mortgagee shall execute an agreement in accordance with MGL Chapter 41 Section 81.U. Said agreement shall provide for the retention of an amount of money determined sufficient in the opinion of the Board to secure the construction of ways and the installation of municipal services, shall establish a schedule of disbursements to the applicant upon completion of various stages of work, and shall make available any undisbursed funds to the Board in the event the work is not completed within the time specified. Failure of the mortgagee to withhold the requisite funds will not obligate the municipality to complete the public improvements called for in the subdivision plans even when title to lots to have been served by such improvements has been transferred to third parties.

B. Non-Compliance

Surety provided in lieu of the covenant shall be maintained in good standing with the Planning Board until the Board votes final release. Failure to maintain surety in good standing can result in a vote of the Board to exercise surety and order the applicant to cease all work on site. The applicant, property owners and any financial institution holding interest in the subdivision shall be notified by Certified Mail of the date, time and location of the meeting when the Board will consider such action.

C. Reduction or Release of Surety

At any time during construction, the applicant may request that the Planning Board reduce the amount of surety held for the subdivision. A written request to reduce surety shall include a detailed list of the estimated cost, construction schedule and timetable for the work to be completed. In the case of a covenant, the applicant may request in writing a Certificate of Release of Lots.

If the project is complete, the applicant shall submit a written request for As-Built approval and release of surety. Final release of surety shall be granted upon the recommendation of the Planning Board staff, the Town Engineer and any other appropriate Town department. Should any department recommend withholding a portion of the surety for a specified time as a condition of As-Built approval, the applicant shall be responsible for maintaining the surety in good standing for the period of time specified.

Within 45 days of receipt of a request to reduce or release surety, the Planning Board will take one of the following actions: vote to release all remaining funds, vote to retain a specified amount or vote to deny the request. In the event that the Board votes reduction or release of surety, the Board will notify Town Treasurer of the vote and the applicant can contact the Treasurer to obtain the funds. In the case of denial, the Board will provide written findings to the applicant and to the Town Clerk.

D. Certificate of Performance

Before the Planning Board grants As-Built approval and releases all surety held, the applicant shall submit certification by an RPE that the ways within the subdivision have been completed in accordance with the Rules and Regulations and with the definitive plan and profile.

SECTION VII
DESIGN STANDARDS - GENERAL

A. Public Utilities

All gas supply lines, and electric, telephone, cable, and fire alarm conduits shall be installed underground. Written proof shall be provided to the Planning Board that designs meet the specifications of the utility company concerned and the public safety departments of the Town of Braintree.

At the determination of the Board, the applicant shall make provision for the sizing and extension of streets, water lines, wastewater systems, drainage facilities, electric, telephone, cable television, fire alarm, and gas lines, if applicable, to adjoining undeveloped lots to serve future development.

B. Bridges

Bridges shall be designed in accordance with the Massachusetts Highway Department [MHD] specifications.

C. Guardrails

The Planning Board may require installation of guardrails.

D. Monuments

Granite bounds of not less than 6" x 6" x 4' with a 3/8" drill hole in the center shall be set on both road right-of-way sidelines, at all changes in direction, at the beginning and end of all curves, or where otherwise designated by the Board. Such bounds shall be set to the satisfaction of the Town Engineer in bank gravel with their tops at the proposed finish grade. An RPLS shall provide certification that the bounds have been set in accordance with the approved plan and the Rules and Regulations.

E. Easements

1) Where necessary, easements for utilities, drainage systems, or pedestrian/bicycle paths shall be provided. Utility and drainage easements shall be a minimum of 20' wide and whenever possible shall be centered on rear or side lot lines rather than across lots. More than one utility may be allowed in one easement. Additional widths shall be provided, if required by the Planning Board, for construction equipment and/or site conditions. The Board may allow easements adjacent and parallel to street lines if required for electric, telephone, cable television and fire alarm conduit installation. Slope easements shall be provided where necessary to insure roadway shoulder slope stability.

2) Where a subdivision is traversed by a water course, drainage way, channel or storm drain, the Board shall require that there be provided a storm water easement or drainage right-of-way centered approximately on the centerline of the water course, drainage way, channel, or stream. This easement or right-of-way shall be of adequate width to conform substantially to the lines of said water course, drainage way, channel or stream and to provide for construction equipment access.

3) No building shall be erected or private subsurface sewage disposal system constructed within an easement.

4) The applicant shall supply certified copies of all easements which are of record at the time of filing. Prior to the recording of a definitive plan, the applicant shall supply to the Board the original grants of easements to be recorded with the definitive plan. The applicant is responsible for recording all easement documents following the Board's endorsement of the definitive plan. Proof of recording shall be submitted to the Board within 30 days of endorsement of the plan.

F. Open Space

Before approval of a plan, the Planning Board may require the plan to show a park or parks for playground or recreation purposes. By appropriate endorsement on the plan, the Board may require that no building be erected upon such park or parks for a period of not more than three years without its approval.

G. Lots

Lots shown on the plan shall comply with the area, frontage, width, and other requirements of the Zoning Bylaw in effect at the time of application. All portions of the tract being subdivided shall be taken up in lots, streets, public lands, or other proposed uses, so that remnants and landlocked areas shall not be created.

H. Protection of Natural Features

1) Due regard shall be shown for all natural features, such as trees, water courses, stone walls, scenic points, historic spots and similar community assets. Water courses, marshes and like natural features shall be protected in accordance with the requirements of the Planning Board and Conservation Commission and the applicable requirements of this section and MGL.

2) In order to preserve as much of the natural vegetation as possible, the applicant shall remove only those trees that are absolutely necessary for the construction of the ways, structures and utilities. Cuts and fills for roadway construction shall be done in a manner that preserves natural vegetation wherever possible. The applicant shall take all appropriate measures to protect those trees that are to remain and shall mark those trees to be removed.

I. Contours

Existing contours shall be preserved insofar as is practical. In any event, no change shall be made in existing contours which, in the opinion of the Board, adversely affects any land abutting the proposed subdivision. Subdivisions shall be designed so as to minimize the necessity for excessive cuts or fills.

J. Trees

On each lot between the front line of the house and the street layout line the developer shall preserve or plant at least two trees 4" in caliper [measured at 4.5' above grade] for each 50' of lot frontage. Trees shall not be planted within 10' of the nearest sideline of the road layout and within 15' of any aboveground utility line. The tree species to be planted shall be approved by the Planning Board

SECTION VIII
DESIGN STANDARDS - STREETS

A. General

1) All streets shall be designed to provide safe pedestrian and vehicular travel. The Board shall determine final street right-of-way widths, which in no case shall be less than 50'. Proposed driveway cuts shall not be within 50' of any intersection. Due consideration shall also be given to the attractiveness of the street layout in order to maximize aesthetics, safety and convenience of travel. Street layouts shall allow for access to adjoining property which is not yet subdivided. Unless approved by the Board, all such layouts shall extend to property lines. Road construction within these layouts may not be required, but the ways shall be laid out and bounded for acceptance along with those streets constructed. At dead ends, street construction shall extend a distance equal to at least 100% of the frontage requirement under the Zoning Bylaw.

2) The Board shall determine the location of all utilities and plantings within the cross sections, street layouts and easements. In general, location of utilities shall be as shown on the "Typical Cross Sections" in Appendix A. Reserve strips prohibiting access to streets or adjoining property shall not be permitted, except where in the opinion of the Board such strips shall be in the public interest.

3) In the case of a definitive plan showing the connection of ways within the subdivision over a private way to a public way, approval of the definitive plan shall be denied unless the applicant has sufficient rights in the private way to enable the applicant to construct improvements to the private way to bring it into conformance with the requirements of these Rules and Regulations or as waived pursuant to MGL Chapter 41, Section 81-R.

4) Material specifications and design standards not specifically addressed within these Rules and Regulations shall comply with the standards set forth in the "Standard Specifications for Highways and Bridges" published by MHD, hereafter referenced as "MHD specifications."

B. Cross Sections

Cross sections shall be drawn in accordance with the appropriate "Typical Cross Section" in Appendix A.

C. Classification

Streets shall be classified as Type I, II or III as shown in the "Typical Cross Sections" in Appendix A. For residential subdivisions, Type I or Type III streets may be constructed as determined appropriate by the Planning Board. For non-residential subdivisions, Type II or Type III streets may be constructed as determined appropriate by the Planning Board.

D. Design Standards/Dimensional Requirements

Characteristic	Type I	Type II	Type III
Horizontal Alignment:			
Minimum radius at centerline	150'	300'	300'
Vertical Alignment:			
Minimum clear sight distance at 4.5' above pavement to 0.5' above pavement	400'	500'	400'
Grade: [A vertical curve is required for all changes in grade line]			
Maximum	8%	5%	6%
Minimum	1%	1%	1%
Maximum grade of leveling area at approach to intersections from sideline of street	1% for 100'	1% for 100'	1% for 100'
Minimum length factor for crest vertical curve [curve length = factor x % grade change]	35	35	35
Minimum length factor for sag vertical curve [curve length = factor x % grade change]	40	40	40
Intersecting streets shall have a low point on approach street to keep water from encroaching on pavement of through street.			
Dead Ends:			
Maximum length without turnaround	50'	Not allowed	No maximum
Maximum length with a turnaround	400'	800'	No maximum
Outside diameter of street layout at turnaround [cul-de-sac]	120'	140'	140'
Outside diameter of street pavement at turnaround [cul-de-sac]	100'	120'	120'
Intersections:			
Minimum intersection angle	60	75	75
Minimum distance between entering streets not directly opposite each other	200'	200'	200'
Minimum radius at street sideline	30'	50'	50'
Minimum radius of curb return	30'	50'	50'
Minimum sight distance	*	*	*
Maximum number of ways converging at an intersection	4	4	4
Minimum tangent centerline length between reverse curves	100'	200'	200'

* Minimum sight distance shall be the stopping site distance found in the most recent edition of A Policy on Geometric Design of Highway and Streets by the American Association of State Highway Transportation Officials, with design speed being the 85th percentile speed.

E. Sidewalks, Driveway Aprons and Curbing

The applicant shall design all sidewalks, driveway aprons and curbing in accordance with MHD specifications and the requirements set forth in 521 CMR 1.00 et. seq. [MGL Chapter 22, Section 13A] and the Americans with Disabilities Act.

SECTION IX
DESIGN STANDARDS - WATER AND SEWER

A. General

Before beginning the design of water and sewer utilities, the applicant shall contact the Braintree Water and Sewer Department [BWSD] to inform them of the project and to receive any comments as to circumstances that may seriously impact the project. The applicant shall also request a copy of the Department's "Rules, Regulations and Guidelines."

B. Water Distribution

The proposed water system shall be designed and constructed in accordance with requirements of the BWSD. All lots in a proposed subdivision must be provided with an approved service connection to the Town's public water supply at the property line. Location of service connections shall be shown on the approved plan.

Hydrants, with valves as approved by the BWSD, shall be installed on all water mains at intervals not to exceed 500'. New mains must be looped to eliminate dead ends except upon specific exemption of the BWSD. Where looping is impossible, a hydrant or blow-off and valve shall be placed at the end of the water main as directed by the BWSD.

C. Sanitary Sewer

The sanitary sewer system and its appurtenances shall be designed and installed to serve the lots in the proposed subdivision by gravity and to provide connection to the municipal sewerage system as approved by the Executive Director of the BWSD. Should the applicant be unable to construct a gravity system, the applicant may propose to the BWSD for their consideration an alternative means of providing sewerage.

The proposed sanitary sewer system shall be designed and constructed in accordance with requirements of the BWSD. Approval of the system must be obtained from the Executive Director. Should said system require connection to the municipal system on land outside the subdivision, the applicant shall identify any necessary easements and provide proof of filing of easement plan(s) at the Registry of Deeds to both the Planning Board and the BWSD.

The calculations used in designing the sewer system shall include the method of estimating average flows [with allowance for infiltration], the peaking factor used, the hydraulic design of the system [with quantity and velocity of flow under both average and peak flow conditions]. Where required, the applicant shall also provide an analysis of the downstream sewerage system to prove that the proposed development will not overload said system.

Where connection to a public sewerage system is not feasible, the applicant shall petition the Board of Health and consult with the BWSD to install an individual sewage disposal system. A private sewage disposal system shall be designed and installed in conformance with Braintree Board of Health regulations and Title 5 of The State Environmental Code, 310 CMR 15.000.

SECTION X
DESIGN STANDARDS - STORM DRAINAGE

A. General

The proposed storm water drainage system shall not contribute pollutants to existing storm water systems, surface waters or ground water on or off the site. The proposed storm water system shall also have no adverse impacts on adjoining lots by creating ponding, significant changes in the water table or increases in water discharge as noted herein. Storm water drainage systems shall implement "Best Management Practices" and conform to the guidelines described in these Rules and Regulations and Massachusetts Department of Environmental Protection [DEP] Stormwater Management Policy. Plans and calculations shall be developed in coordination with the Board, Planning Director, the Town Engineer and the Conservation Commission. The following objectives shall guide the design:

- ensuring public health and safety
- protecting abutting homes and property
- creating aesthetically pleasing designs which minimize disruption to existing natural and topographic features on the site and enhancing views of the natural environment
- ensuring no increase in the rate and volume of run-off from pre-development to post-development conditions
- prohibiting direct discharges into any water body or resource area
- enhancing ground water recharge and
- minimizing future maintenance of the system

B. Design Requirements

The storm drainage design shall be prepared by an RPE and his/her stamp shall appear on all drawings, computation sheets and working plans submitted to the Planning Board for review. If, in the opinion of the Board, a hazard exists or may exist from storm water runoff after construction of the subdivision, the Board may designate an area for storm water retention which shall not exceed 5% of the total undeveloped parcel. Said area shall be separate from the detention/retention area or volume of storage required to comply with other regulations in this section. Design of the storm water drainage system shall consider the entire tributary watershed.

C. Calculations

The applicant shall provide calculations demonstrating that the peak rate and volume of storm water run-off leaving the post-development site will not exceed that leaving the pre-development site for the 2-year, 10-year, 25-year and 100-year storm events. Design calculations to determine the size of all pipes, culverts and basins shall be submitted to the Board for review. Calculations shall be clearly organized, detailed and accompanied by a written narrative.

Sizing of the piping system shall be based on the Rational Method. Storm water run-off shall be determined by using methods developed by the U.S. Soil Conservation Service [SCS]. Drainage calculations shall include a drainage plan showing tributary areas, downstream areas affected by run-off, soil types and surficial cover characteristics [e.g., forest, grass, pavement] for both pre- and post-development conditions.

D. Drainage System

A complete storm drainage system shall be designed for each street. The drainage system shall intercept storm water from adjoining lots, permit unimpeded flow of all natural waterways, and eliminate undesirable or unnatural accumulation of water on any portion of the subdivision or surrounding property. The storm drainage system shall include pipes, catch basins, manholes, channels/swales, culverts, headwalls and all other related items that may be required to complete the system to the satisfaction of the Board. Should said system require connection to the municipal system on land outside the subdivision, proof of necessary easements must be provided to the Board.

E. Drainage Structures

1) Drains
Drainpipes shall be designed for the 25-year storm event. The minimum velocity at design flow will be 3' per second [fps] for pipes 36" and smaller and 2.5 fps for pipes 42" and larger. The maximum velocity for all pipes shall be 10 fps. A minimum of 2.5' of cover shall be required over drainpipes. Drainpipes shall be reinforced concrete [Class III minimum] and have a minimum diameter of 12". Where adjoining lots are not subdivided, provision shall be made for extension of the drainage system by continuing pipe to the boundary of the subdivision and providing a manhole for proper future connection.

2) Culverts
Culverts shall not be designed as drains with slope considerations. Culverts shall be designed for the 100-year storm event. Calculations to determine the size of the culvert as well as headwater, tailwater, entrance and discharge conditions must be provided. The minimum culvert size shall be 18". Culverts shall be reinforced concrete pipe [Class III minimum] or box culverts.

3) Headwalls
Concrete or rubble masonry headwalls shall be provided at both ends of culverts and the discharge ends of storm drains. Storm drain and culvert discharges should be designed with inverts above "normal tailwater" elevation. Headwalls shall be set on a minimum of 12" thick layer of .75" to 1.5" crushed stone. They shall conform in all respects to MHD specifications.

4) Scour/Erosion Protection
The discharge ends of all drains shall be protected with a rip rap apron having a width of not less than three times the nominal diameter of the pipe which shall extend not less than ten times the nominal pipe diameter from the end of the discharge pipe. Rip rap aprons shall consist of a layer of stone conforming to MHD specification M2.02.3. "Stone for Pipe Ends." Rip rap aprons shall be set on a minimum 12" thick base layer of .75" to 1.5" crushed stone and be of appropriate depth [thickness] to provide a stable and durable area to dissipate discharge velocities. Where the Board has approved exit velocities greater than 8 fps, a stilling basin of suitable design shall be provided in addition to the required rip rap aprons.

5) Channels/Swales
The 100-year storm event shall be used for design of channels/swales. When earth and stone-paved open channels/swales are used, the typical section should have a flat bottom and side slopes no steeper than 3:1 [horizontal to vertical] with the top of the slope at least 1' higher than the design water surface. The velocity allowed in an open earth channel/swale at design flow shall not exceed 6 fps. Whenever possible, channels/swales shall be grassed to promote aesthetics and contaminant removal.

6) Area Drains

Inlets shall have an adequate water way opening to pass the design runoff for a 25-year storm event with not more than 0.2' of surcharge. Grates and frames shall be cast iron suitable for the loads which can occur either during the construction or afterward. Inlets shall be constructed of reinforced pre-cast concrete sections conforming to MHD specifications. Inlets shall be set on a minimum 12" thick layer of .75" to 1.5" crushed stone. Inlets shall be used in offstreet locations and the grate frame shall be mortared in position with the top 0.2' below the grade of the surrounding finished ground surface. Area drains shall conform in all respects to MHD specifications.

7) Catch Basins

Drain inlets located in streets shall be reinforced pre-cast concrete catch basins with a minimum sump of 48". Catch basins shall be located in pairs, one on each side of the road, as required to collect the storm water runoff but shall not be spaced more than 300' apart unless otherwise approved by the Board. Catch basins shall be located along edges of pavement but shall not be located within driveway curb cuts or at sidewalk access ramps for persons with disabilities. Catch basins shall be set on a minimum 12" thick layer of .75" to 1.5" crushed stone. Series connections between catch basins shall not be allowed unless approved by the Board. Catch basins shall conform in all respects to MHD specifications.

8) Manholes

Manholes shall be constructed of reinforced pre-cast concrete and be provided with a solid cast iron frame and cover. A manhole shall be used at every change in pipe size or direction, either vertical or horizontal, and at all pipe intersections. Manholes shall be installed at intervals not to exceed 300'. The letter "D" at least 3" in size shall be cast into the manhole covers. Manholes shall be set on a minimum 6" thick layer of .75" to 1.5" crushed stone.

Manholes shall conform in all respects to MHD specifications. At manholes where the outlet pipe is larger than inlet pipe, the crown of the outlet pipe shall be at the same elevation or lower than the crown of the lowest inlet pipe. Where inlet and outlet pipes are of the same diameter, the crown of the outlet pipe shall be a minimum 0.2' below the crown of the inlet pipe. A shaped invert is not required but the bottom of the manhole shall be finished at the same grade as the outlet pipe invert.

9) Drainage Basins

Detailed plans for all detention/retention basins and pre-treatment basins are required. At a minimum, they shall include cross sections, soil profiles, seasonal high ground water elevation, storm water control structures, and emergency overflow. Drainage basins shall conform to the following requirements:

a) Bottom of basin shall be a minimum of 2' above seasonal high ground water level and shall be vegetated to promote filtration and removal of contaminants. Permanent standing water is discouraged unless the basin is located adjacent to or is hydrogeologically connected to a wetland or water body.
b) Pre-treatment shall be provided to remove contaminants from the storm water prior to entering a detention/retention basin. Contaminants to be removed include sediment, grit, oil and debris. Pre-treatment facilities may include lined siltation basins, sediment forebays, oil/water separators and oil/grit separators. Oil/water and/or oil/grit separators shall be provided for all parking lot drains with paved areas in excess of 1,000 square feet. No water will be permitted to recharge or leach into the ground without pre-treatment for removal of oil and sediment.

c) Basins shall be designed to retain the 100- year storm event with at least 1' of freeboard at the maximum water level. The 100-year storm water level shall be shown on the plans. All basins shall be designed with an emergency overflow spillway with appropriate erosion protection.

d) Retention facilities shall be designed to retain storm water for a minimum of 24 hours and dissipate within 72 hours based on the infiltration rate of the soil. Infiltration rate used for design shall be 25% of the measured percolation rate [e.g. percolation rate equals 2 min./in., infiltration rate equals 8 min./in.].

e) Test holes shall be required for all basins to determine soil profile and seasonal high ground water level. Percolation tests shall be required for any basin or leaching facility designed for recharge of storm water into the ground.

f) Detention basins shall be designed for optimum contaminant removal by maximizing the distance from inlet to outlet.

g) Side slopes in basins shall not exceed 3:1 [horizontal to vertical] and the maximum depth of a basin shall not exceed 5". Fences or vegetative screening around basins may be required by the Board.

h) Basins and associated outlet aprons and swales shall be incorporated into separate land parcels exclusively for purposes of storm water management.

i) An access road that allows maintenance equipment full access to the pre-treatment facility, detention/retention basin, inlets, outlets and emergency spillway shall be provided.

j) Basins shall have emergency outfalls with rip rap aprons to provide energy dissipation and erosion protection. Outfall invert elevations shall be above the 100-year storm water elevation.

k) A 50' buffer zone of existing vegetation shall be retained between all basin components and adjacent uses, structures and parcel property lines. A 30' buffer zone of existing vegetation shall be retained between all point source discharges of storm water and surface waters and/or wetlands.

SECTION XI
EROSION CONTROL

A. General

These regulations are designed to allow broad discretion for addressing the impacts from construction activities so long as erosion and storm water runoff control measures [control measures] comply with the objectives and standards outlined below. These regulations do not specify or mandate specific control measures, but provide the flexibility to choose or design control measures subject to review by the Planning Board.

The objectives of these regulations are:

- to reduce environmental damage from sediment and erosion by requiring adequate provisions to control storm water runoff [runoff] and by protecting exposed or disturbed areas
- to restrict runoff entering or leaving sites to non-erosive velocities through the use of control measures so that surface and ground water quality are protected, erosion is minimized and flooding potential is reduced
- to assure that control measures are incorporated into site planning at an early stage in the design process
- to prevent the unnecessary stripping of vegetation and loss of soils, especially adjacent to water bodies
- to prevent construction activities that may cause mass movement, slumping, or erosion of land surfaces
- to prevent excess turbidity in water bodies
- to eliminate costly maintenance and repairs to roads, embankments, swales, streams, water bodies, storm water control facilities, and adjoining lots

B. Applicability

These regulations shall apply to every definitive plan application where:

- site work involves the excavation or placement of more than 100 cubic yards of material, disturbs cumulatively more than 5,000 SF, or will occur on a slope greater than 15%
- a site contains highly erodible soils or drains directly into a water body
- a retention pond or basin of 1,000 SF or more in size will be created
- the Board determines that there is a high potential for environmental degradation from erosion or runoff

C. Erosion and Storm Water Runoff Controls

A description of erosion and storm water runoff controls [description] shall be submitted with every application subject to this section and shall be prepared in accordance with the methods and measures identified in the following publications:

- "The Massachusetts Erosion and Sediment Control Guidelines for Urban and Suburban Areas: A Guide For Planners, Designers, and Municipal Officials" [EOEA] and

- "Guidelines for Soil and Water Conservation in Urbanizing Areas of Massachusetts" [Natural Resources Conservation Service]

1) Said description shall include:

   a) The nature and purpose of the development and the amount of grading involved
   b) The proposed stages of development including start and completion dates, the sequence of construction and grading activities, the sequence for installing control measures and for final stabilization
   c) Current site conditions
   d) Neighboring areas that might be affected by the development, i.e. roads, water bodies and residences
   e) The soils on site including soil names, map unit, erodibility, permeability, texture and soil structure
   f) Areas with potentially serious erosion problems
   g) The methods which will be used to control runoff, erosion and sedimentation
   h) Specifications and calculations of how the site will be stabilized during and after construction
   i) A maintenance component:
      (1) identifying all of the control measures that will be inspected and maintained
      (2) providing an inspection schedule for each control measure
      (3) listing typical maintenance procedures for each control measure
      (4) describing steps to take if control measures prove inadequate
      (5) providing forms and instructions for record keeping
      (6) listing personnel assigned to each task and the training needed to perform each job

2) In addition, the applicant shall submit an Erosion and Storm Water Runoff Plan which shall include:

   a) North arrow, scale, benchmark and datum
   b) Existing and final contours at 2' intervals extending at least 50' beyond the site's boundary
   c) Existing vegetation including tree lines, grassy areas and unique vegetation
   d) Boundaries of the different soil types on site
   e) Property lines
   f) Elevations of streets, parking lots, water levels of ponds and wetlands, storm sewer inlets and outlets and the first floor of all structures
   g) Drainage dividing lines and direction of flow for the catchment areas on site during and after construction
   h) Areas with potentially serious erosion problems
   i) Limits of clearing and grading
   j) Location of utilities, control measures to be installed on site with detail drawings, off-site and on-site access routes for construction and maintenance vehicles, borrow and waste disposal areas, and debris and garbage disposal area
   k) Vegetation specifications for temporary and permanent stabilization
   l) Methods and location of concrete-wash disposal

3) Development shall not begin until the control measures identified are installed and functional. The Board may require that a certified professional verify in writing that all control measures have been installed in accordance with the description. All control measures shall be maintained to comply with the description.

4) Control measures shall be maintained in perpetuity and in accordance with the description by either the applicant or any owner of a lot on which said measures have been installed.

D. Sequencing of Control Measures

If a project is so large or complex that a narrative of the entire project cannot reasonably be prepared prior to initial groundbreaking, an applicant may seek authorization from the Board to undertake major grading activities incrementally. Approval by the Board of phased grading activities shall take place in two steps. The applicant shall submit to the Board for review and approval:

1) a conceptual plan of the entire development, and

2) detailed plans prepared by an RPE for each phase of the project showing the nature and extent of the work to be completed in that phase.

E. Standards

1) Development shall be fitted to topography and soils so as to minimize erosion.

2) In no event shall any site work be started prior to the starting date specified in the narrative.

3) Natural vegetation shall be retained and protected wherever possible.

4) Clearing, grading or other site work shall be performed in a manner that will minimize erosion and shall be limited to the area of immediate construction operations and for the shortest period of time practical.

5) Site drainage shall be designed to effectively treat increased runoff created during and after construction so that adjoining lots and downstream water bodies are protected from erosion.

6) Uncontrolled runoff shall not be diverted onto adjoining lots or into the storm drain or sewer system. Said runoff shall be disposed of at non-erosive velocities at established drainage locations.

7) Sediment transported by runoff shall be retained on site through the use of sediment basins, silt traps or other appropriate measures which, to the extent possible, shall be installed before clearing and grading begin.

8) Cut and fill slopes shall be constructed in a manner that will minimize erosion. No slope shall be steeper than 2:1[horizontal to vertical] unless approved by the Board.

9) Diversions or other appropriate measures shall be installed at the top of cut and fill slopes to prevent uncontrolled drainage flows on the disturbed slopes.

10) Drainage swales used to divert runoff shall be vegetated and stabilized to control erosion in concentrated flow areas.

11) All functioning storm drain inlets shall be protected so that runoff will not enter the conveyance system without first being filtered or otherwise treated to remove sediment.

12) Suitable control measures, such as temporary seeding or mulching, shall be used to protect critical areas exposed during construction.

13) A site shall be maintained and/or watered to prevent dust erosion.

14) Grading shall not be permitted to continue if the Board determines that dust is significantly impacting adjoining lots or ways.

15) Topsoil shall be stockpiled on site to the extent practicable for use on areas to be revegetated. Said soil shall be protected so that it does not erode.

16) Stockpiled construction materials shall be protected so that they do not erode. Excavated materials shall not be deposited or stored near water bodies unless authorized by the Board.

17) Construction equipment shall not cross or disturb stream channels except at approved crossings.

18) In areas of the site where construction activities will cease for more than 21 days, or have permanently ceased, temporary vegetation or other stabilization measures shall be initiated within 14 days of cessation of said activities, weather permitting.

19) Where inadequate vegetation exists, temporary or permanent vegetation shall be established.

20) Permanent protective vegetation and erosion control structures shall be installed as soon as practical and shall not be considered established until the ground cover is mature enough to control erosion satisfactorily. Ground cover shall not be considered mature until at least two growing seasons have elapsed.

21) Whenever access routes for construction vehicles intersect public roads, provisions shall be made to minimize the transport of sediment by runoff or by vehicles onto said roads. When sediment is transported onto a public road surface, the road shall be cleaned thoroughly at the end of each day, or more often if required by the Board.

SECTION XII
CONSTRUCTION SPECIFICATIONS

A. General

1) All street lines and grades shall be set by the applicant's engineer in a manner satisfactory to the Planning Board.

2) The applicant shall be responsible for all utilities and appurtenances installed under these Rules and Regulations until the Planning Board releases the entire subdivision. Prior to said release, the applicant shall repair at his/her expense any damage to these utilities and appurtenances in a manner satisfactory to the Board and any Town department or utility involved.

3) All underground utilities shall be installed, tested and approved as soon as sub-grading is completed and before any gravel is placed. Prior to the installation of sidewalks, curbing and bituminous concrete surfaces, all public improvements shall be extended a distance of 5' into each lot on the plan to promote the logical extension of the public infrastructure.

4) Any street excavation for utility connections shall be patched immediately in conformance with MHD specifications. Final patching shall be approved by the Town Engineer.

5) Unsuitable material below normal pipe inverts shall be removed and replaced by material approved by the Town Engineer. Unsuitable material shall not be used for trench backfill.

6) Backfill shall be compacted to 95% of the maximum dry density of the material in conformance with MHD specifications.

7) Temporary sanitary facilities shall be provided at the expense of the applicant during the construction phase. The applicant shall be responsible for the proper use of such facilities.

B. Order of Construction/Notification of Commencement of Work

1) The Planning Board, the Town Engineer and all affected Town departments and public service utility companies shall be notified in writing at least 2 work days prior to the commencement of each of the following:

   a) installation of temporary erosion control facilities
   b) clearing and grubbing
   c) grading
   d) installation of storm drainage facilities including vegetation of all storm water basins
   e) installation of water and sanitary sewer facilities
   f) excavation for underground gas, electric, telephone, cable television and fire alarm systems
   g) placing of material for sub-base
   h) spreading of gravel in or above sub-base
   i) installation of curbing and curb inlets
   j) laying of bituminous concrete bottom course
   k) construction of retaining walls
   l) spreading of gravel in sidewalks
   m) laying of bituminous concrete for sidewalks and aprons

n) final grading of slopes
o) spreading of loam for grass plots
p) laying of bituminous concrete top course, and
q) setting of bounds

The order of tasks outlined above shall be followed as nearly as possible during construction. Storm water basins shall be constructed and vegetated prior to any road construction.

2) Work commenced without notification as stipulated above shall be performed at the applicant's own risk. Any work performed by the Town Engineer necessitated by lack of proper notification shall be at the applicant's expense.

C. Storm Drainage

The installation of the storm drainage system, including the method of construction and the quality of material used, shall conform to MHD specifications and these Rules and Regulations. Drain piping, catch basins and manholes shall not be backfilled until inspected and approved by the Town Engineer.

D. Water and Sewer

1) The installation of the water and sewer systems, including the method of construction and the quality of material used, shall conform to the Braintree Water and Sewer Department [BWSD] Rules, Regulations and Guidelines. Permits must be obtained and fees paid before any work can begin. A copy of the Rules, Regulations and Guidelines is available upon request at the Office of the Water and Sewer Department.

2) Record drawings of water and sewer installations must be prepared and submitted to the BWSD upon project completion. The record information shall be submitted both in electronic format and on hard copy.

E. Underground Gas, Electric, Telephone, Cable Television and Fire Alarm Distribution Systems

1) Prior to construction, the applicant shall establish finish grade and furnish and protect offset lines and grade stakes for use by Braintree Electric Light Department [BELD], Braintree Fire Department, gas, telephone and cable television companies.

2) To allow for compaction, no sooner than two weeks after the installation of water, sewer and drainage systems, the applicant shall excavate a trench 24" wide and 40" below finish grade to allow for installation of conduit. In addition, the applicant shall excavate for manholes, street light bases, and other such items on the construction plans. Said excavations shall be under the direction of BELD and the telephone company. The trench shall be graded to a smooth bed, free of stones. Excavation in rock foundation or ledge shall be made to a depth 10" below the proposed utility and fine fill shall be added prior to the installation of conduit and cables. Trenches shall be maintained by the applicant until backfilling is completed.

3) All excavations shall be done in an orderly sequence to allow for installation of underground structures and ducts followed by backfilling with fine material acceptable to BELD. Backfilling shall be done in layers of not more than 12" and shall be carefully and thoroughly tamped.

4) When all preparatory conditions are met, a qualified contractor acceptable to BELD shall install required manholes, conduit, handholes, transformer pads, street light bases and appurtenances.

F. Street Construction

1) General
Construction of all streets, including sidewalks and grass plots, shall conform to the Typical Cross Section of the approved plan. Should street construction delays occur in the subdivision after homes have been occupied, the applicant shall provide safe and convenient access to all occupied residences.

2) Excavation and Backfill
All frost-susceptible material, loam, muck or other soft material shall be excavated to hard bottom and replaced with suitable material from within the limits of the proposed street for its full length and width. Sub-grade shall be thoroughly compacted before placing the gravel sub-base. The sub-base shall consist of 12" of thoroughly compacted well-graded bank gravel and 3" of dense graded aggregate.

3) Bituminous Concrete Pavement Type I-1
Bituminous concrete pavement shall be laid in 2 courses, standard bottom course [binder] and standard top course with finished pavement depth after compaction as shown on the Typical Cross Section [Appendix A]. Methods and materials of construction shall conform to MHD specifications.

G. Sidewalks, Driveway Aprons and Curbing

1) Bituminous concrete sidewalks shall be constructed on both sides of the subdivision roadways. Sidewalks shall be constructed on a sub-base of at least 9" of thoroughly compacted, well-graded gravel and laid in two courses, base course and top course as shown on the Typical Cross Section [Appendix A]. Driveway aprons shall be constructed in the same manner with 3" of bituminous concrete after compaction.

2) In no case shall sidewalk and driveway apron surfaces be laid before the sub-base is inspected and approved by the Town Engineer or his/her designee. Sidewalks and grass plots shall pitch from the property line toward the gutter.

3) Curbing shall be Type VA4 granite curbing conforming to MHD specification M9.04.1 "Granite Curb." Curbing to be set on a radius of 100' or less shall be cut to the required curvature. Granite curbing shall be used on all curves.

4) Granite curb inlets shall be provided at all catch basins.

H. Erosion Control

Measures to control erosion shall be in accordance with the approved Erosion and Storm Water Runoff Plan as specified under Section XI Erosion Control.

I. Miscellaneous

1) Grass Plots
Good quality, screened loam shall be placed to a depth of at least 6" on all areas between the curbs and sidewalks and shall be rolled and seeded in accordance with MHD specifications.

2) Slope Stabilization
Unless otherwise stipulated by the Planning Board, the area outside the street lines of a development shall have a slope no greater than 3:1 [horizontal to vertical] to a point where it intersects with the surrounding ground. Loam shall be placed to a depth of 6" on all slopes and shall be seeded. When ledge is encountered in a cut section, the slope may be 1:4 [horizontal to vertical]. Appropriate temporary measures shall be taken to prevent erosion of slopes during construction and until they are stabilized.

3) Retaining Walls
When the final grades cannot be constructed according to the above slope ratio, a retaining wall shall be constructed. The design and type of wall construction shall be submitted to the Planning Board for approval prior to installation. Retaining walls shall be located outside the street layout lines of the development in order to support the street or the adjoining lots. Retaining walls shall be constructed in accordance with MHD specifications.

4) Street Signs
The applicant shall petition the Board of Selectmen to assign a name for each street within the approved subdivision and the applicant shall request the Town Engineer to assign a street address for each home in the subdivision. After consultation with Braintree Highway Department, the applicant shall install street signs at all intersections prior to the occupancy of any newly constructed house in the subdivision.

5) Final Site Clean-up
Upon completion of the work, the entire area of the subdivision shall be cleaned of all dirt, debris, construction materials, etc., leaving a neat and presentable appearance. The entire storm drainage system including siltation basins, detention/retention basins, catch basins, manholes and pipes shall be cleaned and free of debris.

SECTION XIII
INSPECTIONS

A. General

The quality of materials used and methods of installation of public improvements within a subdivision must be inspected by the Planning Board's engineer. If the engineer determines that the work is not acceptable, he/she shall so indicate in a report which shall include all recommendations necessary to make the work acceptable.

For the purpose of inspection, the applicant shall provide safe and convenient access to the subdivision to Town officials and/or their designees. The applicant shall be responsible to see that there are sufficient stakes, grades, batter boards and/or other control points established and used in construction so that the Board's engineer may easily determine whether or not the plans and specifications are being followed during construction. If the engineer believes the work has not been laid out to conform to the lines or grades shown on the approved plans, he/she will so advise the Board at which time the Board may hire, at the expense of the applicant, an RPLS to check the lines and grades.

No underground construction shall be covered unless it has been inspected in accordance with these Rules and Regulations and the requirements of other Town agencies and boards. If such work has been obscured or covered to any extent, such work shall not be approved until brought into full view.

B. Notice of Inspection

The applicant shall request inspection of street or other public improvements by 24-hour advance notice to the Planning Board's engineer.

C. Planning Board's Engineer

The Planning Board's engineer shall be either the Town Engineer or a consulting firm. If the Planning Board retains the services of a consulting engineering firm, said firm shall have at least one Registered Professional Civil Engineer as a full-time employee. The consulting firm shall also employ, either as staff or subcontractor, an RPLS.

D. Inspection Fees

All costs for any necessary engineering services [inspections or consulting services] shall be borne by the applicant. Services shall be billed from the time the inspector leaves his/her office and until inspection is complete.

Prior to the start of any site work associated with an approved definitive plan, the applicant shall provide to the Planning Board for deposit with the Town Treasurer an inspection fee of $400 for each lot shown on the approved definitive plan. Upon satisfactory completion of all improvements, the Board shall authorize a refund to the applicant of any unexpended portion of the inspection fee.

E. Required Inspections

Installation of private or communal sewerage shall be inspected by the Board of Health.

The construction of streets and other public improvements shall be inspected following:

1) Completion of clearing and topsoil removal

2) Installation of drainage prior to any back filling of trenches or other covering of structures

3) Installation of public water improvements prior to any back filling of trenches or other covering of structures

4) Installation of public sewer improvements prior to any back filling of trenches or other covering of structures

5) Completion of roadway sub-grade and prior to any further roadway construction

6) Construction of the roadway base layer(s)

7) Completion of the roadway pavement and any shoulders, curbing, sidewalks, and planting and

A final inspection of the entire section of construction including monuments at required points, headwalls and final clean-up shall be performed after completion of all items of work. Inspection of work shall not relieve the applicant of any obligation to fulfill the requirement of this section or Section XII Construction Specifications.

SECTION XIV
TRAFFIC

A. General

The purpose of this section is to provide for the orderly movement of traffic, reduce accidents, allow adequate emergency response, and maintain adequate and safe streets; discourage the use of neighborhood streets as shortcuts by promoting the use of arterial and collector streets; encourage the use of traffic engineering design standards appropriate for a residential suburban community; encourage private sector participation in managing traffic; create and maintain safe and convenient pedestrian access and bike paths; encourage the use of public transit, carpools and vanpools; promote clean air by reducing exhaust emissions. This section shall apply to every definitive plan.

B. Traffic Study

When the proposed activity under review will generate 50 or more new trips during the peak hour of the development, a traffic study shall be prepared by an RPE or other appropriate professional specializing in traffic planning and submitted with the application for a definitive plan. If no streets are impacted by a development, the Planning Board may determine that a traffic study is not required. The applicant may consult with the Board prior to the submission of a definitive plan in order to identify the intersections to be studied and the appropriate elements to include in the study.

Trip rates may be based on Institute of Transportation Engineers' Trip Generation [ITE], latest edition, or data from similar developments in similar settings in Massachusetts.

1) If ITE is used, the Land Use Code [LUC], number of studies, weighted average trip rate, trip generation equation, standard deviation and coefficient for each land use on site shall be provided. The weighted average trip rate or trip generation equation to predict trips for each land use shall be based on the procedures set forth in ITE.

2) If local trip rates are used, the methodology used and the applicability of the data shall be provided.

3) If data is available from ITE and local sources, the applicant may demonstrate why the ITE data should not be used. The Planning Board shall determine which data source will be used.

All traffic counts including turning movements shall have been taken within 12 months of the date of submission and shall be adjusted for seasonal variation with an explanation as to how the adjustment was made.

Where appropriate, projections of Average Daily Traffic [ADT], turning movements and capacity analyses shall be adjusted for background traffic [with an explanation as to how said adjustment was made], truck and bus traffic, vacant space in existing buildings in the study area, trips generated by the proposed development based on full occupancy and trips generated by other developments in the study area that are under review, approved by any agency of an abutting municipality or in the MEPA process.

If an exceptional peak period is likely to occur, the Planning Board may require analysis of traffic for said period.

Trips from an existing land use that are being replaced by a new land use may be subtracted as follows:

1) If trip generation and distribution for the new land use [new trips] have the same characteristics as the land use being replaced, the new trips may be reduced by a number not to exceed the trips generated by the replaced land use.

2) If the new trips do not have the same characteristics as those generated by the replaced land use, trips generated by the existing land use may be subtracted from the street system.

Where a project accesses or impacts a state highway, evidence of consultation with MHD shall be provided.

When applicable, the traffic study shall have the following elements:

1) Executive Summary, to include:

   a) Scope of work including project location, locus map and site plan, description of type and intensity of existing and proposed development and description of study area
   b) Schedule for project development
   c) Summary of existing and future traffic conditions including deficiencies in the street system
   d) Summary of traffic impacts and proposed mitigation
   e) List of all permits required

2) Review of traffic studies undertaken within the study area in the previous 5 years in abutting municipalities

3) Description of roadway characteristics for all impacted streets to include:

   a) Inventory of land uses within 500' of the development and on each impacted street
   b) Identification of all curb cuts and driveways within 500' of the development
   c) Physical characteristics including roadway geometry and grades, number of travel lanes, widths of rights-of-way, travel lanes, sidewalks and shoulders, and condition of pavement, sidewalk and curbing
   d) Inventory of traffic control devices [including regulatory parking and warning signs, traffic signal permits, control units and description of signal phasing]
   e) Sight distances and obstructions to sight lines
   f) Location and type of street lighting
   g) Actual and posted traffic speeds
   h) Number, type and location of accidents by year for the most recent 3 years
   i) Description of transit system serving the study area including mode, frequency, schedule, routes, stop locations and patronage
   j) Time and peak volume of parking for the development
   k) Location of pedestrian and bicycle routes
   l) Location of churches, schools, parks and similar land uses within the study area

4) Description of traffic improvements to be completed in the study area prior to the design year, with a schedule of implementation and identification of the parties responsible for implementation

5) ADT on all impacted streets for the current year, the no-build and build conditions of the design year [no-build and build conditions]. Current ADT shall be counted for a 48-hour period on a typical weekday

6) Existing site-generated trips with a trip assignment

7) Identification of the peak hours [A.M., P.M., and Saturday] of the development and for adjacent streets with an explanation as to how the peak hours were selected

8) Development-generated trips for the peak hours of the development and for adjacent streets and a trip assignment with an explanation as to how the assignment was made [If projected trips are adjusted for pass-by or diverted trips, an explanation as to how the adjustment was made shall be provided. Adjustment for pass-by trips shall be limited to 25% of site-generated trips and 5% of the volume of the traffic on the street serving the site.]

9) All peak hour turning movement counts on all impacted intersections for the current year and the no-build and build conditions

10) Capacity analysis for the current year and the no-build and build conditions on all impacted streets and street segments [Said analysis shall be based on the latest edition of the Transportation Research Board's Highway Capacity Manual and shall include a queue analysis and critical volumes by signal phase or turning movement for each intersection studied.]

11) Gap analysis for unsignalized intersections and site driveways which experience excessive delays or are approaching capacity

12) Measures to mitigate traffic impacts shall include:

    a) The process through which the mitigation will be authorized, designed, financed and implemented
    b) Capacity analysis on all impacted streets and intersections based on the mitigation proposed
    c) Review of potential impact to utilities, wetlands, archaeological/historical sites, etc.
    d) Implementation schedule [If the mitigation is to be phased, the Traffic Study shall indicate implementation and functioning for each phase.]
    e) If site design and geometric changes are proposed, said changes shall be based on current engineering standards for turn pocket transition tapers, lane widths, sight distance, multiple lane configuration, and rights-of-way widths. A description of said changes shall include plans at a scale of 1" = 40' showing existing and proposed layout lines, building footprints, parking lot areas and driveways, the relationship of the site layout to existing rights-of-way [with sight distances], proposed geometric changes and widening [driveways, storage lanes, acceleration and deceleration lanes, turning lanes, etc.]
    f) A traffic management plan for impacted streets which allows access during construction to adjoining lots by vehicles, pedestrians, and persons with disabilities
    g) Measures to mitigate traffic-generated noise and dust pollution
    h) If signalization of an unsignalized intersection is proposed, the applicant shall provide a signal warrant analysis based on the latest edition of the Manual on Uniform Traffic Control Devices [FHWA] as well as alternative mitigation for the intersection.
    i) A program to monitor the effects of the mitigation for a period not to exceed 3 years after implementation.

C. Traffic Capacity

Prior to approval of a definitive plan, the Planning Board shall determine if there will be adequate capacity on all impacted streets for the build condition. If adequate capacity is projected on any impacted

street for the no-build condition and a development causes a decrease in LOS, the Board may require implementation of mitigative measures to restore the LOS to the no-build condition. If any impacted street does not have adequate capacity for the build condition, the Board shall take one of the following measures: require the implementation of mitigative measures to achieve adequate capacity or deny the application.

Prior to approval of a definitive plan, the Planning Board shall determine if any impacted street will be the receptor of excessive traffic. If the Board finds that there will be an increase in projected traffic [any peak hour or ADT] between build and no-build conditions greater than that indicated in Figure I below, the Board shall either require the implementation of mitigative measures to reduce the volume of traffic or deny the application.

FIGURE I

Average Daily Traffic	*Allowable Increase in % of traffic*
1 – 2,000	30%
2,001 – 5,000	20%
5,001 – 10,000	15%
10,001 +	10%

D. Conditions of Approval

The Planning Board may condition its approval on:

1) Completion of mitigation prior to issuance of any occupancy permit or posting of surety to guarantee implementation of mitigation

2) Implementation of measures to reduce trips generated by the development, including use of employer-subsidized public transit passes, carpools/vanpools, flex time or staggered work hours, preferential parking for high occupancy vehicles, restricted peak hour access to/egress from off-street parking areas, measures to promote pedestrian access and to encourage bicycle commuting, i.e. secured bike racks, locker and shower facilities [The Board may require the submission of periodic reports on the effectiveness of the trip reduction programs as part of the monitoring required under the Traffic Study, Executive Summary.]

3) Reduction in the size or intensity of the project

4) Phasing of the development of the project

5) Obtaining of all other required permits

E. Intermunicipal Coordination

If a development impacts streets in another municipality, the traffic study shall be submitted to that municipality for review and comment concurrently with the filing. The Planning Board shall not take final action on the definitive plan until it has received comment from said municipality or 35 days have elapsed from date of the submittal of the traffic study to said municipality. The Board may require the study and mitigation of impacted streets in an abutting municipality provided that said municipality has adopted these traffic regulations and is not permitting the development. Such municipality shall approve any mitigation proposed for any street within its jurisdiction.

F. Compliance

If the Planning Board determines that its conditions on traffic are not being met, the Board shall require the applicant to bring the development into compliance.

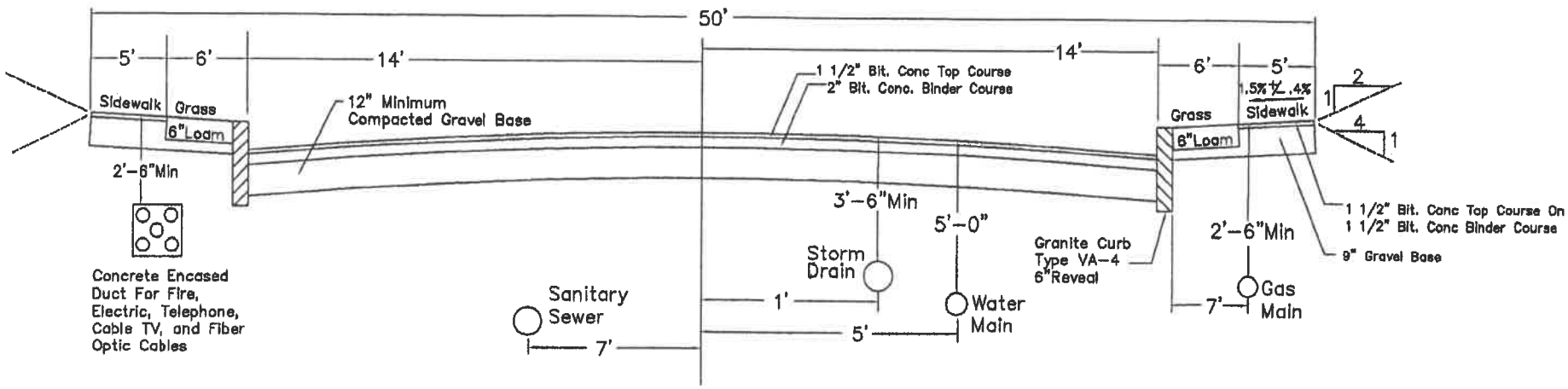

TYPICAL CROSS SECTION

(NOT TO SCALE)

TYPE-1

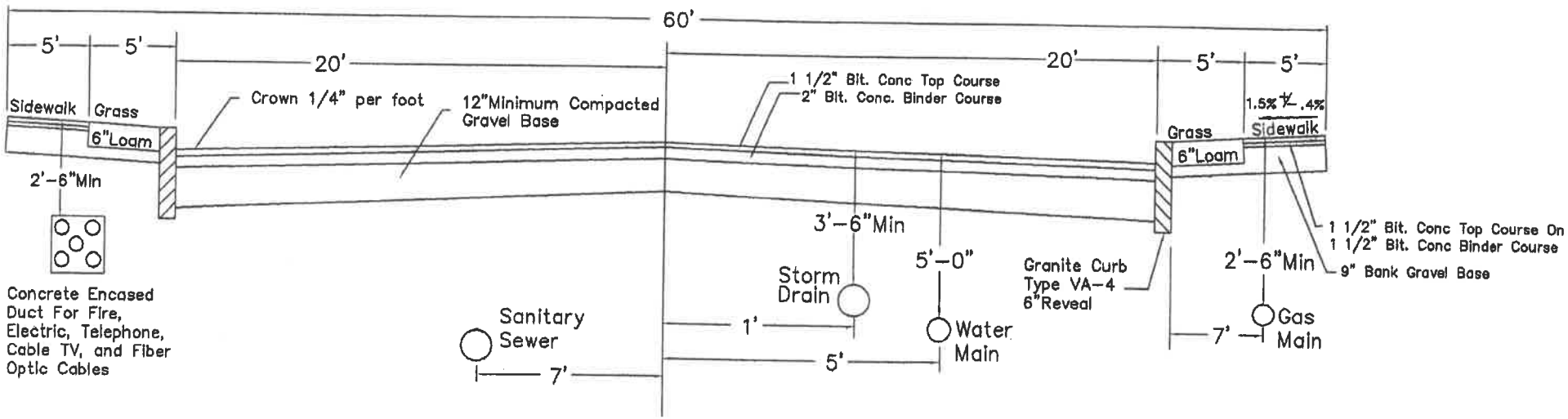

TYPICAL CROSS SECTION

(NOT TO SCALE)

TYPE-2

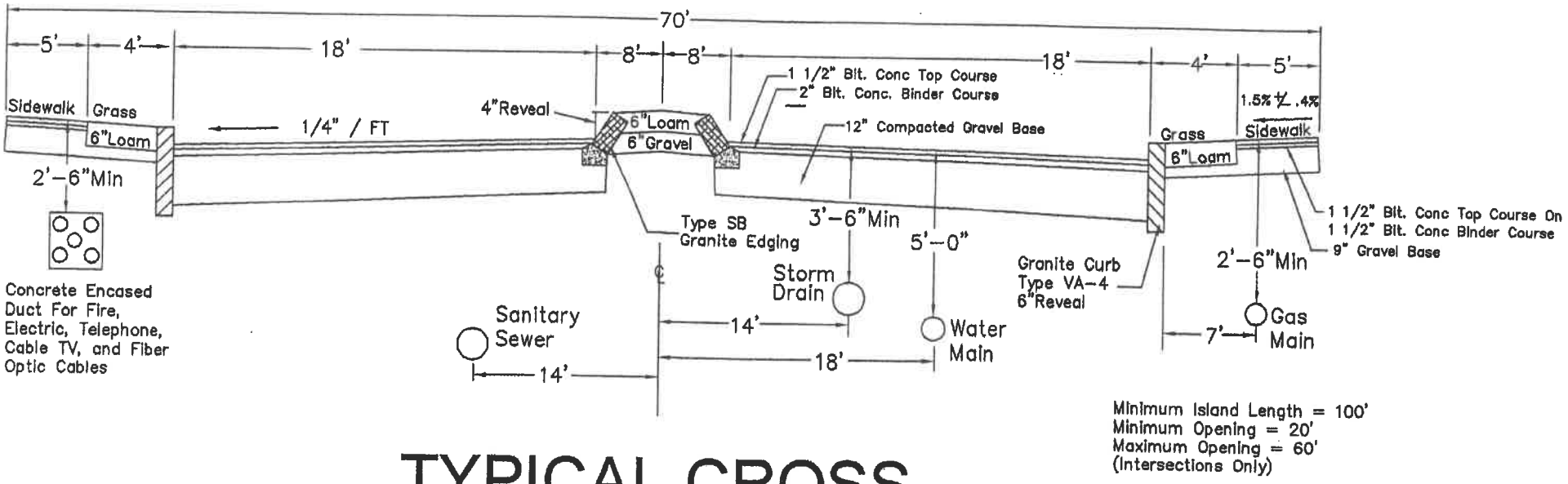

Minimum Island Length = 100'
Minimum Opening = 20'
Maximum Opening = 60'
(Intersections Only)

TYPICAL CROSS SECTION

(NOT TO SCALE)

TYPE-3

APPROVAL UNDER SUBDIVISION CONTROL NOT REQUIRED

Application for a determination by the Planning Board that approval under the Subdivision Control Law is not required.

Location of Property _____ Lot Size _____

Assessors' Plan[s] _____ Plot[s] _____ Zoning District _____

The Owner's Title to the land is recorded at Norfolk County Registry in *Book* _____, *Page* _____
or Land Court on *Certificate Title #* _____, *Book* _____, *Page* _____

The division of land shown on the accompanying plan is not a subdivision because

_____ every lot shown on the plan has at least the minimum frontage required by the Braintree Zoning Bylaw and has frontage on

_____, **a public way** (1)
name of street

_____, **a way shown on a plan previously approved/endorsed in accordance with the Subdivision Control Law**
name of way

_____, **a private way** (2)
name of private way

_____ it shows on a proposed conveyance which changes the size and/or shape of the lot[s] in such manner that frontage is not affected

_____ two or more buildings were standing on the land prior to 6/21/1949 and a building remains standing on each of the lots shown on the accompanying plan. Evidence of the existence of said buildings must be attached

_____ other [See MGL, Chp. 41, Sec. 81-L] _____

Applicant _____ Phone _____

Address _____

_____ _____
Signature of Applicant Date

Property Owner's name and address [if not applicant] _____

_____

_____ _____
Signature of Owner, if not applicant Date

(1) or way which Town Clerk certifies is maintained and used as a public way

(2) in existence on 6/21/1949 which has, in the opinion of the Planning Board, sufficient width, suitable grades and adequate construction to provide for the needs of vehicular traffic in relation to the proposed use of the land abutting the way and for the installation of municipal services to serve the lot[s] and the building[s] erected, or to be erected, thereon

PRELIMINARY PLAN

Location of Property _____

Assessors' Plan[s] _____ Plot[s] _____

Zoning District _____

Floodplain Designation _____

Number of Proposed Lots _____ Total Acreage _____

Applicant _____ Telephone Number _____

Address _____

Representative _____ Telephone Number _____

Property Owner _____ Telephone Number _____

Address _____

The undersigned applicant is owner of all the land included in the proposed preliminary subdivision or is the agent or representative of said owner. This Preliminary Plan is submitted in accordance with the Rules and Regulations Governing the Subdivision of Land in the Town of Braintree, Massachusetts for approval of said plan.

_____ _____

Applicant Date

_____ _____

Signature of Owner [if different] Date

Title of Plan _____

Prepared by _____ Dated _____

Title to land is derived from deed dated _____ and recorded at

Norfolk Registry of Deeds in Book _____, Page _____

Land Court on Certificate # _____ Book _____, Page _____

Said land has the following covenants, easements or conditions of record:

Said land is free of encumbrances except for the following:

DEFINITIVE SUBDIVISION PLAN

Location of Property _____ Floodplain Designation _____

Assessors' Plan[s] _____ Plot[s] _____ Zoning District _____

Number of Proposed Lots _____ Total Acreage _____

Preliminary Plan[check one]: None _____ Approved on _____ Disapproved on_____

Title to said land is derived from deed dated _____ and recorded at

Norfolk Registry of Deeds *Book* _____, *Page* _____ Land Court *Certificate Title #* _____

Book _____, *Page* _____

Title of Plan _____

Dated _____ Prepared by _____

Applicant _____ Telephone Number _____

Address _____

Representative _____ Telephone Number _____

Property Owner _____ Telephone Number _____

Address _____

Said land is free of encumbrances except for the following:

Said land has the following covenants, easements or conditions of record:

The undersigned applicant being owner, agent or representative of all the land included in the proposed subdivision described above submits said plan as a Definitive Plan in accordance with the Rules and Regulations of the Braintree Planning Board and makes application for approval of said plan.

_____ _____ _____ _____

Signature of Applicant Date Signature of Owner [if different] Date

11/02 FORM

CERTIFICATE
OF
AMENDMENT, MODIFICATION OR RECISION
OF
APPROVAL OF DEFINITIVE SUBDIVISION

TO: Town Clerk

FROM : Planning Board

DATE:

REQUEST OF:

DEFINITIVE PLAN ENTITLED:

BY:

DATED: REVISED:

RECORDED in Norfolk County Registry of Deeds Plan Book _____, Page _____

COVENANT recorded Norfolk County Registry of Deeds Book _____, Page _____

At a duly called and properly posted meeting of the Braintree Planning Board on _____ and in accordance with MGL Chapter 41 Section 81-W the Planning Board voted to approve the following amendment/modification/recision of the above described definitive plan:

Pursuant to MGL Chapter 41, Section 81-W all prior conditions of approval shall remain in full force and effect until such time as they are met. This Amendment/Modification/Recision shall take effect when there is duly recorded at the Norfolk County Registry of Deeds the plan as originally approved [or copy thereof], a certified copy of this vote to amend/modify/rescind and any plan or other document referred to in this vote. In the case of Amendment or Modification, said recording shall be at the expense of the applicant.

The Amendment/Modification/Rescission of the approval of this plan does/does not affect the lots in the subdivision which have been sold or mortgaged in good faith and for a valuable consideration. The consent of the owner(s) of lots and of the holder(s) of the mortgage or mortgages affected are attached.

Any person aggrieved by this decision may appeal to the Norfolk County Superior Court or to the Land Court or to the District Court, Quincy Division, by bringing an action within twenty days after this decision has been filed in the Office of the Town Clerk.

Town of Braintree by a majority of the Planning Board:

_____ _____

_____ _____

_____

Then personally appeared

the above named members of the Braintree Planning Board and acknowledged the foregoing instrument to be the free act and deed of said Planning Board before me.

_____ My Commission expires: _____

Notary Public

11/02 FORM

COVENANT

KNOW ALL MEN BY THESE PRESENTS, WHEREAS, WE, _____,

of _____ in the county of _____, in the state of

_____, have submitted a Definitive Plan application to the Planning Board of the Town of Braintree for approval of a definitive plan and profile of a subdivision of our land located at _____ into _____ lots.

The Plan is entitled _____,

and dated _____

by _____ of _____, hereinafter "the Plan."

WHEREAS we have requested that said Planning Board approve said Plan without requiring a performance bond,

NOW THEREFORE IN CONSIDERATION that the Braintree Planning Board waive the requirement for a bond as provided in MGL Chapter 41, Section 81-U as amended and for other good and valuable consideration we hereby covenant and agree with said Planning Board and their successors in office as follows:

1. We are the owners of record of the premises shown on said Plan, and there are no mortgages of record or otherwise on any of the land in the aforesaid subdivision except as described below and are subordinated to this covenant.

2. We agree to satisfactorily observe and perform all of the covenants, conditions, agreements, terms and provisions contained in the Definitive Plan application, Certificate of Approval dated _____, Rules and Regulations Governing the Subdivision of Land and the Subdivision Control Law.

3. This covenant shall take effect upon the approval of said Plan by the Braintree Planning Board. Reference to this Covenant shall be entered upon said Plan and this Covenant shall be recorded when said Plan is recorded. No lots will be released from this Covenant until the Book and Page of the recording of this Covenant have been given to the Planning Board by the Covenantor and verified by the Clerk of said Board.

4. We will not convey any lot or erect or place on any lot any permanent building until the work on the ground including the construction of ways and the installation of municipal services necessary to adequately serve such lot has been completed in the manner specified in the aforesaid Definitive Plan application, with the definitive plan and profile as approved by said Board and as further set forth in the Rules and Regulations Governing the Subdivision of Land in the Town of Braintree, as amended. However, a mortgagee who acquires title to the mortgaged premises by foreclosure or otherwise and any succeeding owner of the mortgaged premises or any part thereof may convey any such lot or lots only subject to that portion of this Covenant and the aforesaid application and the rules and regulations which provide that no lot so conveyed shall be built upon until such ways and services have been provided to serve such lot or lots.

5. Nothing herein shall be deemed to prohibit a conveyance subject to this Covenant by a single deed of the entire parcel of land shown on the Plan or all lots not previously released by the Planning Board without first providing such ways and services.

6. This Covenant and agreement shall be and is binding upon our executors, administers, heirs and assigns, and particularly upon our grantee or successors in title to the premises shown on said Plan, it being the express intention and understanding and agreement that this Covenant shall constitute a Covenant running with the land included in said subdivision.

7. It is understood that the lots within said subdivision shall respectively be released from the foregoing conditions upon the recording of a Certificate of Release of Lots signed by a majority of the Planning Board and enumerating the specific lots released.

EXECUTED as a sealed instrument _____ by _____ [Owner]

Description of Mortgages:

Each of the undersigned hereby agrees that the mortgages held by him [it] on said premises shall be subordinate to the above Covenant.

▪
▪
▪

The undersigned _____,wife/husband of the Covenantor, hereby agrees that such interest as I may have in said premises shall be subject to the provisions of the Covenant and insofar as is necessary release all rights of tenancy by courtesy, dower, homestead and other interest therein.

_____ _____
[wife/husband] date

COMMONWEALTH OF MASSACHUSETTS

_____, ss. _____
date

Then appeared personally before me the above named _____ and acknowledged the foregoing instrument to be his/her free act and deed.

_____ My Commission expires: _____
Notary Public

Town of Braintree by a majority of the Planning Board:

_____ _____

_____ _____

_____

Then personally appeared

the above named members of the Planning Board of the Town of Braintree, Massachusetts, and acknowledged the foregoing instrument to be the free act and deed of said Planning Board, before me.

_____ My Commission expires: _____
Notary Public

AFFIDAVIT FOR SUBMISSION OF CASH SURETY

Name of Entity Submitting Cash Surety _____

Tax Identification Number [TIN] _____

or

Social Security Number [SSN] _____

Under penalties of perjury, I certify the following:

1) I am authorized to sign this affidavit on behalf of the entity named above.

2) Check one:

_____The number shown on this form is my SSN.

_____ The number shown on this form is the TIN of the entity identified above.

3) I am not subject to backup withholding either because I have not been notified by the Internal Revenue Service [IRS] that I am subject to backup withholding as a result of a failure to report all interest or dividends, or the IRS has notified me that I am no longer subject to backup withholding.

Name _____

Signature _____

Date _____

Then personally appeared before me the above named _____ and acknowledged the foregoing instrument to be his/her free act and deed before me.

_____ My Commission expires _____.

Notary Public

BOND AGREEMENT

made this day

between the Town of Braintree by and through its Planning Board ["Town"]
and

_____

a corporation with a principal place of business at
("Surety").

The purpose of this Agreement is to secure the bond that is attached hereto as Exhibit 1.

KNOW ALL PERSONS by these presents that the Surety agrees to hold $ as surety for said _____ and firmly binds itself and obligates itself to the Town in this amount; and furthermore, that the Surety hereby binds and obligates its respective executors, administrators, devisees, heirs, successors and assigns, jointly and severally to the Town, in the sum of $ and has secured this obligation by the issuance of the bond instrument attached hereto as Exhibit 2 to insure performance by the Indemnors listed in the Indemnification Agreement of all covenants, conditions, agreements, terms and provisions contained in said Agreement.

This Agreement and the Bond shall remain in full force and effect until the Indemnors have fully and satisfactorily performed all of their obligations under the Definitive Plan Approval.

In the event that the Indemnors should fail in their obligations under the Definitive Plan Approval, the Surety shall make the funds guaranteed by the Bond available to the Town upon written demand from the Town. Failure by the Town to seize the funds when a default occurs shall not be deemed a waiver of the right to do so.

The parties agree that Massachusetts law shall govern any dispute regarding this Bond Agreement and that the Norfolk Superior Court shall have jurisdiction over any such dispute. In the event of any dispute regarding this agreement, the Surety further agrees that it and its successors-in-interest, if any, shall accept service of process, by certified mail, at the following address:

Any amendments to this agreement shall only be made in writing and upon agreement by all parties to this agreement.

IN WITNESS WHEREOF, we have hereunto set our hands and seals this

_____	_____
[date]	Authorized Representative of Surety
_____	_____
[date]	Developer
_____	_____
[date]	Town of Braintree

PERFORMANCE SECURED BY LENDER'S AGREEMENT

among

The Town of Braintree, by and through its Planning Board ["Town"],

and

_____["Applicant"],

a Massachusetts corporation with a principal place of business at

_____

and

_____["Lender"]

The purpose of this Agreement is to secure the construction of the ways and installation of the municipal services shown on the approved definitive plan that depicts _____ residential lots located in Braintree, Massachusetts on

_____

and is entitled

as prepared by _____

dated _____, as revised on _____ ["Plan"].

The Applicant hereby warrants that it is the sole owner of the property depicted on the Plan and that it executed and recorded a subdivision covenant, dated _____ in the Norfolk Registry of Deeds, Book_____, Page _____.

KNOW ALL PERSONS by these presents that the Applicant has recorded a first mortgage in favor of the Lender, dated _____, in the Norfolk Registry of Deeds on Book_____, Page _____, covering all or part of the premises shown on the Plan as security for the payment by the Applicant of a certain note, in the principal sum of $_____; and furthermore, that the Applicant and Lender hereby bind and obligate themselves and their respective executors, administrators, devisees, heirs, successors and assigns, jointly and severally, to the Town in the sum of $_____, and have secured this obligation by the Lender retaining $_____ of said principal sum, otherwise due to the Applicant, to insure performance by the Applicant of all covenants, conditions, agreements, terms and provisions contained in the following:

1) the Subdivision Control Law,
2) the Planning Board's Subdivision Rules and Regulations, dated November 1, 2002,
3) the Application for the Approval of Definitive Plan dated _____, as revised, and
4) the Definitive Plan Approval issued by the Planning Board, including all conditions, dated _____.

The Lender agrees that no portion of the funds retained by it as security for construction of subdivision ways and installation of municipal services [$_____] shall be disbursed by the Lender to the Applicant without the prior written release from the Planning Board, as voted by a majority of the Board. This Agreement shall remain in full force and effect until the Applicant has fully and satisfactorily performed all of the obligations enumerated above.

SCHEDULE of OBLIGATIONS

	Sum to be Retained by Lender	Stage of Construction or Work to Complete	Completion Date
1)	$		
2)	$		
3)	$		

[add additional stages, if necessary]

Upon satisfactory completion by the Applicant of an obligation as specified in Schedule of Obligations [above], the interest of the Town in the funds retained by the Lender shall be released by majority vote of the Planning Board and the portion of this agreement covering a specific stage of work shall become void and the Lender may disburse such funds or portion of funds which have been held as security for a specific stage of work, if and when a specific stage of work has been satisfactorily completed by the Applicant.

In the event that the Applicant should fail to complete any stage of construction of ways and installation of municipal services as specified in this Agreement and within the time herein specified, any funds remaining undisbursed shall be made available by the Lender to the Town, to the extent of the reasonable cost to the Town of completing the portion of the work specified in this Agreement. Any unused portion of such funds will be released by the Town and disbursed to the Lender upon completion of the work by the Town. Failure by the Town to seize the funds when a default occurs shall not be deemed a waiver of the right to do so.

In exchange for proper execution and recording of this Agreement by the Lender and the Applicant, the Planning Board hereby agrees to release Lots _____ inclusive, as shown on the Plan, from the subdivision covenant previously accepted as subdivision surety under MGL Chapter 41, Section 81U.

Any amendments to this agreement or to the first mortgage referred to herein shall only be made in writing and upon agreement by all parties to this Agreement.

In WITNESS WHEREOF we, Town, Applicant and Lender, have hereunto set our hands and seals

this date:_____

Town of Braintree, by a majority of the Planning Board:

_____ _____

_____ _____

_____

Norfolk County

_____
Date

Then personally appeared , one of the above-named members of the Braintree Planning Board and acknowledged the foregoing instrument to be the free act and deed of said parties before me.

_____
Notary Public

My Commission expires: _____

this date:_____

_____
Signature of Developer

Then personally appeared , the **Developer** and acknowledged the foregoing instrument to be his/her free act and deed before me.

Norfolk County, [date]_____

_____
Notary Public

My Commission expires: _____

this date:_____

_____
Signature of Authorized Representative of Lender

Then personally appeared , **authorized representative of the lender**, and acknowledged the foregoing instrument to be his/her free act and deed before me.

Norfolk County, [date]_____

_____
Notary Public

My Commission expires: _____

CERTIFICATE OF RELEASE OF LOTS

Planning Board File: # _____

Definitive Plan Entitled: _____

by_____

dated _____

Recorded in: Registry of Deeds as Plan No. of _____ [year]

in Plan Book _____, Page _____

or

Land Court as Document No. _____ and noted on said Certificates of Title _____

Covenant dated: _____

Recorded at: Registry of Deeds in Book _____, Page _____

or

Land Court on Certificates of Title _____ in Registration Book _____, Page _____

WHEREAS _____has posted surety for the completion of _____ from Station _____ to Station _____, including _____, as shown on said plans,

NOW THEREFORE lots numbered _____are hereby released from the Covenant and may be sold or built upon.

Town of Braintree by a majority of the Planning Board:

_____ _____

_____ _____

_____

Then personally appeared

the above named members of the Planning Board of the Town of Braintree, Massachusetts, and acknowledged the foregoing instrument to be the free act and deed of said Planning Board, before me.

_____ My Commission expires: _____

Notary Public

11/02 FORM

CERTIFICATE OF PERFORMANCE

[Approval of Covenant Release]

Planning Board File: # _____

Definitive Plan Entitled: _____

by_____

dated _____

Recorded in: Norfolk Registry of Deeds as Plan No. of _____ [year]

in Plan Book _____, Page _____

or

Land Court as Document No. _____ and noted on said Certificates of Title _____

Covenant dated: _____

Recorded at: Norfolk Registry of Deeds in Book _____, Page _____

or

Land Court on Certificates of Title _____ in Registration Book _____, Page _____

The undersigned, being a majority of the Planning Board of the Town of Braintree, Massachusetts, hereby certify that the requirements for work on the ground called for by the Covenant identified above have been completed to the satisfaction of the Planning Board as to the following lots _____ and said lots are hereby released from restrictions as to sale and building thereon.

Town of Braintree by a majority of the Planning Board:

_____ _____

_____ _____

_____

Then personally appeared

the above named members of the Planning Board of the Town of Braintree, Massachusetts, and acknowledged the foregoing instrument to be the free act and deed of said Planning Board, before me.

_____ My Commission expires: _____

Notary Public